Transceivers including the ICOM IC-275, IC-820/821, IC-910, IC-9100, and IC-9700, all have a pre amp switch with delay sequencing built in, so they are all able to directly power a pre-amplifier through the antennas coaxial cable connection so require no external bias tee.

The application below shows how the EME220-2M band masthead Pre-amplifier can be used with the Kenwood TS2000, and is similar for many other transceivers.

The TS2000 does not have the ability to feed DC power out of the antenna socket to power a masthead pre-amplifier, so either a suitable low loss bias tee, or some way of directly connecting to the preamplifier board is required. The simplest way is to connect Pin 6 on the 13 pin DIN connector to the junction of R6 and R9 on the preamplifier board. The output on pin 6 of the TS2000 has an open collector transistor that is only able to sink very low current, so some caution is required to not destroy the transistor. Connecting it this way will require twin shielded cable to be connected between the Transceiver and the preamplifier board to power and switch it. Alternatively if you want to power and switch the pre-amplifier via the coaxial cable, then the EME168-6-2, or EME168-2-70 bias tees can be used. The PTT1 connection on the bias tee board when grounded by Pin 6 on the TS2000, disconnects the power to the pre-amplifier via the coaxial cable, so this should be connected to the RCA connector when using it with the TS2000. The RF sensing circuit on the EME220-2M board should always be used as extra protection in case the PTT connection from the Transceiver is unconnected.
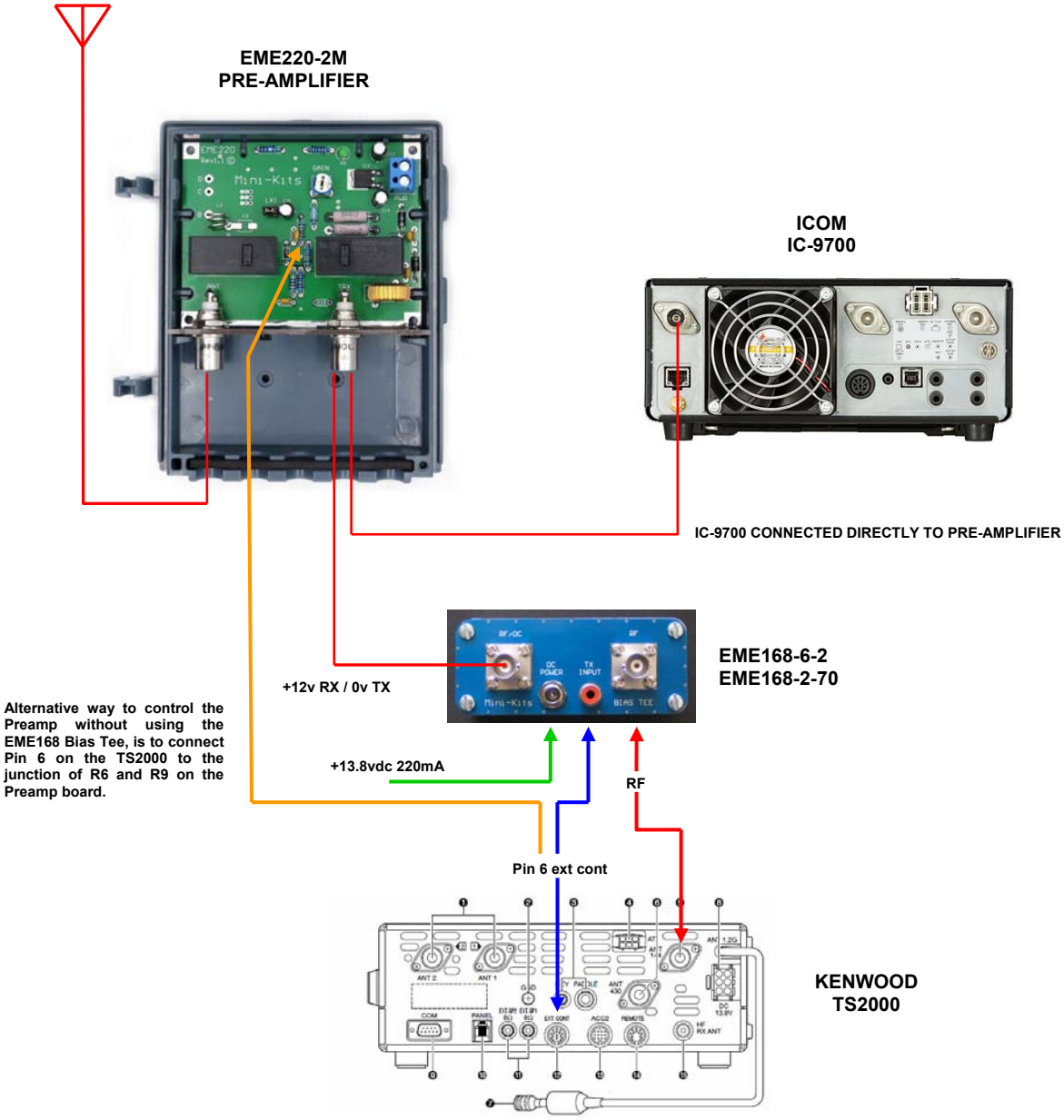
For a 23cm pre-amplifier application, use Pin 4 on the EXT CONT connector of the TS2000, and for 70cm pre-amplifiers Pin 1 is used.