SPECIFICATIONS: EME167 KIT1 Rev2

Frequency Range:	0.1 to 70MHz (180MHz clock)
Board Interface:	+5vdc logic input and outputs
Clock:	On-board CMOS clock module or External Clock up to 180MHz (30MHz using x6 mult AD9851)
RF Output:	+10dBm (10mW) GALI-84+ (set with DAC-Rset) +/-0.5dB, 1 to 40MHz, -3dB @ 70MHz.
Spurious Output:	With reference to the Fundamental Output @ 0dBm, 30MHz clock –55dB, 2nd Harmonic –32dBc, 3rd –50dBc. All other Spurious > -50dBc
Power Supply:	+12vdc 200mA (EME167 KIT1 PCB only)
Size:	PC Board 65 x 45mm
Kit Webpage:	**www.minikits.com.au/eme167.htm**

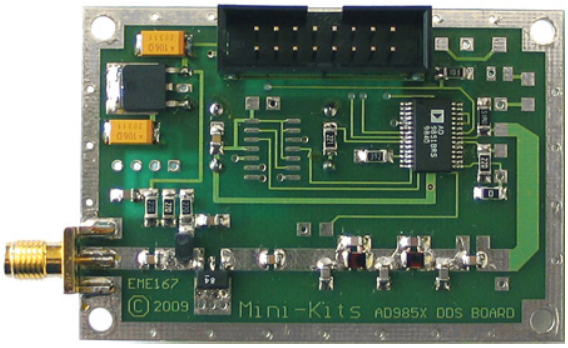

DESCRIPTION: If you are constructing a complete DDS including micro-controller, please refer to the additional notes for these Kits before reading this document. This document refers to the use of the EME167 KIT1 along with the EME170 DDS controller Kit and dd_synth_ver2.x software. This module can also be used with the EME190 DDS Controller and M1-DDS software.

The Basic AD9851 DDS VFO Kit can be used for various applications using your own microcontroller and software, or it can be used with the Mini-Kits EME170 DDS controller Kit to construct a simple DDS VFO, or Sweep Generator. Mini-Kits only supports basic software to use with this Kit, but the source code for the PIC Microcontroller is available if you want to change it for your own application. The Kit uses the Analogue Devices AD9851 DDS chip, and supports the serial load functions of the AD9851 chip only. The DDS output is filtered with a 70MHz low pass filter and then amplified to a level of 10mW (+10dBm). The board interface connector has most of the commonly required connections to the DDS chip that are used in various DDS, or SRD project designs.

BOARD DESIGN: The PC Board is a professionally made plated through hole FR4 board that uses a single analogue and digital power supply and ground. No attempt was made to use separate supplies and grounds as the improvement on reducing any noise would be minimal.

AD9851 DDS: The following notes refer to the 180MHz AD9851 DDS chip. The AD9851 is capable of generating a frequency agile sinusoidal output frequency to around 70MHz, with a tuning step of 0.01Hz. The AD9851 uses a 10 bit D/A converter, and uses a high clock speed that allows a maximum Spurious Free Dynamic Range, SFDR of > 43dB. This may not be quite good enough if fed straight into a mixer for a high performance Radio application without good filtering, but is quite ok for many projects including signal generators and general coverage receivers. **Please refer to the AD9851 Data sheet on the Analogue Devices web site.**

POWER SUPPLY: Refer to the circuit diagram. The DDS board interface connector **(C1)** requires +12vdc @ 200mA minimum to power the board. A 78M05 regulator supplies +5v to the AD9851, clock and other +5v circuitry on the board. The AD9851 requires +5v for the analogue AVDD, and the digital DVDD, and a single +5v supply is used for both. The +12v powers the Gali-84 amplifier as it requires a higher voltage to produce a clean RF output. The board has the option of an external +5v input on connector C1, so the +5v regulator can be removed if not required.

CLOCK OSCILLATOR: The board has been designed to suit a +5v clock module in a conventional DIP, (9x14mm) package. Many low cost +5v clock modules produce more than +5v P-P output, and this can cause erratic frequency output from the AD9851 DDS. A 220R resistor is used on the output of the clock module to slightly reduce the output so it does not overdrive the DDS clock input pin 9. For the various combinations of clocks and clock multiplier, refer to the AD9851 data sheet. An external clock can be fed into the **(C3)** connection on the board for use with external GPS locking of the DDS.

DDS DAC OUTPUT: The DDS DAC outputs are on pins 20 and 21, and it depends on whether the high speed comparator is used or not, to the configuration of the DAC output circuitry. For a single sine wave output pin 21 is used and is terminated into 50ohms, with pin 20 being connected via a 22R resistor to ground. The 8k2 resistor on the DAC_Rset pin 12, sets the DAC output current. The current is set to produce a very low

RF output of around –15dBm from the DDS which improves the SFDR, Spurious Free Dynamic Range. To keep the DDS design simplified, no output transformer has been used which would have reduced the even order harmonics by a few dB on the output.

DDS OUTPUT FILTER: The maximum recommended frequency from the AD9851 DDS is around 70MHz when using a 180MHz clock. The output of the DDS uses a 5th order low pass Elliptic filter with a cut off frequency of 70MHz, which reduces aliases and quantization noise from the DAC output. The low frequency response is mainly set by the 0.1uF coupling capacitors and 100uH inductor, which allow a usable output down to 100kHz.

OUTPUT AMPLIFIER: When we were designing the DDS Kits, we looked into various amplifiers that could be used on the DDS output. The requirement was for a low distortion, wide bandwidth amplifier with at least +10dBm output. Many DDS projects in the past used either a discrete transistor amplifier, or a MMIC type amplifier like the Mini-Circuits MAR or ERA types. Many were less that ideal and produced high distortion products, and some were not very flat from DC to the VHF region. Due to the complexity in using either a balanced transistor design, or a wideband Opamp, it was decided to test the Mini-Circuits Gali-84+ device. Generally these types of amplifiers require high current to produce low distortion, and the Gali-84+ requires 100mA bias so runs quite warm. The Gali-84+ has quite a very flat 25dB gain from HF to VHF, a 21.9dBm output @ 1dB compression, and IP3 of 38dBm. With the –15dBm output from the DDS on pin 21, the output from the Gali-84+ is +10dBm which is well under the 1dBm compression of the device so produces a very clean output. **Refer to the data sheet for the Gali-84+ on the www.minicircuits.com website.**

CONSTRUCTION:

1. This Kit is for advanced constructors only that have some experience in using SMD components. This Kit many be a challenge for some due to the very fine pitched DDS chip that needs to be soldered onto the board. Many of the other conventional sized SMD components are easily fitted. The PC board supplied is a professionally made plated through hole board to make construction easier. To assist construction especially with which side of the board the components are mounted, please refer to the PCB overlay diagrams in these notes, and pictures on the Kits webpage, www.minikits.com.au/eme167.htm

2. Follow the PCB overlay and circuit diagrams carefully, by checking the components and placing them onto the board. There are a number of components mounted on both sides of the board.

3. If you have purchased a Kit that already has the AD9851 chip soldered to the board, then go on with fitting the remaining components. If you are going to fit the chip yourself then it should be fitted first. **The chip should only be fitted by very confident and experienced constructors. Mini-Kits will not replace any damaged chips or PC boards.**

4. The first part of construction is to fit the AD9851 chip to the board. Initially line the chip with the tracks on the board and tack solder two pins on diagonal sides of the chip. Use a magnifying glass and make sure that the chips pins are aligned before soldering the rest of the pins. **The shiny tracks can give the illusion that the chip is aligned if the light falling on the board is not direct, and from an angle**. Some moving of the chip may needed by using the soldering iron on either of the tack soldered pins, and pushing the chip slightly to fully align it. Apply liquid flux along one side of the chip and then tin the soldering iron with a small amount of solder. Place the soldering iron tip side on to the chip, hold it against a number of pins at the same time and then pull the iron tip away from the chip. Do this along the full length of the chip and check under a magnifying glass for any bridges. Bridges can be fixed by applying solder flux to the chips pins and using the soldering iron in the same way as soldering to remove the bridges. Do not feed solder into the chip pins else you will probably bridge the pins.

5. Next part of construction is to start with the small chip resistors, capacitors, and inductors using a pair of tweezers to hold them in place when soldering. Be careful when fitting the components in the filter as any mistakes with mixing them up will affect the filters response. This could be very difficult to track down later on without fully replacing all the filter components. Then solder the SMD regulator IC, larger SMD Tantalum capacitors, and Gali-84+ to the board. When fitting the crystal oscillator module to the board, be careful that you fit it the correct way around on the board.

6. R1 (0R Link) should not be fitted if you are using the EME170/190 controller Kits. This is an option for those that are using their own microcontroller hardware and are using an external +5vdc supply. **R2 (0R Link) should be fitted If you are using the EME170/190 controller and Mini-Kits software,** and grounds the reset line on the DDS to suit the software.

7. Fit the 16 Pin IDC header connector, **(C1)** to the board. Be careful when fitting noting the polarity of the IDC keyway cut out, so that it is aligned with the board overlay legend. **Mistakes here could cause damage to the circuitry if the IDC header has been reversed.**

8. Finally solder the SMA connector to the RF output connec-

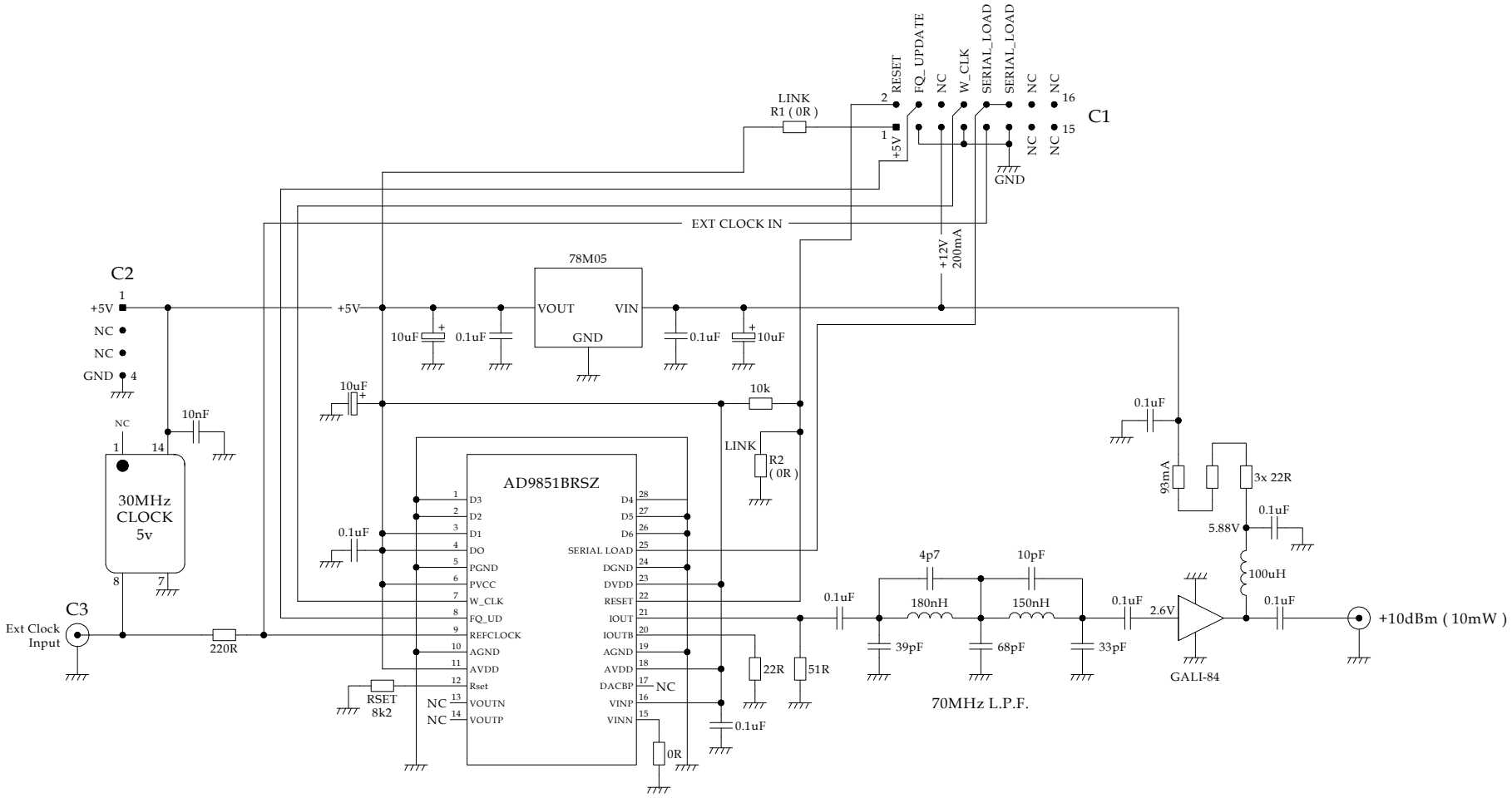

NC = NOT CONNECTED (UNUSED)

AD9851 DDS VFO KIT Rev3

DRAWN	MINI-KITS
DATE	6-1-15
PROJECT	AD9851 DDS KIT
FILE	EME167Kit1-Rev3.SKF

tion on the board.

CONNECTIONS:

1. If you are using either the EME170, or EME190 PIC controller board then the 16 Pin Header on either boards is simply connected to the 16 pin Header **(C1)** on the DDS Board. If the DDS board is being used with another micro-controller application, then refer to the PC Board overlay diagram for the signal and power supply requirements for Header **(C1)** on the board.

2. Connector **(C2)** is not used in this version of the Kit.

3. For connecting an external clock to the DDS, an optional MMCX female PC mount connector or coaxial cable can be directly connected to **(C3)** on the board.

TESTING:

1. Be careful when connecting an external power supply to the DDS board. Connecting voltages higher than +5v to the +5v input will damage the AD9851 chip.

2. The testing assumes that you have the EME167 DDS board connected to a EME170 DDS Controller Board with LCD module and backlight. Connect a suitable +12 volt power supply with current limiting, or a 0.5 Amp fast blow fuse inline to the power supply input to the EME170 board. Check that the EME167 (200mA) and EME170/LCD with backlight (30mA) combination is drawing less than 250mA.

3. If you have not set the EME170 Calibration Menu to suit the DDS then power down the boards and press the **Cal button (B)** in and power up the boards. The display should show (ENABLE RPT NO). Release the CAL button and press it again and again to cycle through the menu settings. The DDS x1 or x6 multiplier along with DDS reference frequency 180MHz can be set. For a 30MHz Xtal Module the DDS reference should be 180MHz, (30MHz x6). All options can be changed by turning the rotary encoder and then pressing the Cal button. When you have completed all the settings, another press of the Cal button will save the settings to the eeprom in the PIC and return the display to normal. **(Refer to the EME170 Kit notes for more information).**

4. If you have got a Spectrum Analyzer , then connect a –10 to 30dB attenuator inline and check the RF output spectrum to make sure that the main RF output produces around +10dBm and that the rest of the spectrum is clean.

OPTIONS:

1. If an external clock is used then it should have a maximum of +5 volts p-p output. The clock can be fed into the board using a MMCX connector **(C3)** or by a direct coaxial cable connection. Some CMOS oscillator modules produce higher P-P output levels than the voltage that they run on, and this could cause possible damage or the DDS to not work correctly. The 30MHz +5vdc clock module used on the EME167 board uses a 220ohm resistor inline to reduce the output level so as not to overdrive the AD9851 clock input.

3. If you require a square wave digital I/Q output for a simple SDR radio project, then please use the EME167 KIT2.

NOTES:

1. For any issues please refer to the Kits webpage www.minikits.com.au/eme167.htm on the Mini-Kits website.

2. The EME167 KIT1 is compatible with the EME150, EME170, and EME190 PIC Controller boards. The HF-DDS, and M1-DDS software supports the EME150/190 PIC controller boards, and can be used with the AD985x and AD995x series DDS chips. The dd_synth_ver2.x software only supports the EME170 PIC controller board and can only be used with the AD985x series DDS chips.

3. There are some limitations when using the EME167 KIT1 with the HF-DDS or M1-DDS software due to the AD9851 having a maximum frequency output of 70MHz. The software includes all the Ham bands up to the 430MHz 70cm band, but the AD9851 DDS can only be used up to the 6M 50MHz band when using a 9MHz IF.

4. When using the DDS for a HF receiver application, low level birdies may be heard mainly on the higher HF bands between 14 and 30MHz unless a suitable band pass filter is used on the output of the DDS. The M1 Transceiver uses a 9MHz IF, and It is recommended that a 23 to 39MHz filter is used on the DDS output for the 14 to 30MHz bands to filter out high order spurs from the DDS. For extra filtering on the 0.5 to 14MHz bands, a high order 9.5 to 23MHz band pass filter with a steep low frequency roll off can be used. The on-board 70MHz filter should not need to be removed when using additional filtering.

5. For all information relevant to the AD9851 including clock frequencies and software etc, please refer to the AD9851 Data sheet on the Analogue Devices website. Mini-Kits cannot supply any technical or software support for your specific application.

QTY	PARTS LIST PART #	DESCRIPTION	BOARD #
3	0R	1206 SMD Resistor	**(Link R1 / R2)** Fit R2 for use with EME170/190 Controller
4	22R	1206 SMD Resistor	
1	51R	1206 SMD Resistor	
1	220R	1206 SMD Resistor	
1	8k2	1206 SMD Resistor	
1	10k	1206 SMD Resistor	
10	0.1uF	SMD Capacitor X7R 50v 0805	**(1 spare)**
2	10nF	SMD Capacitor X7R 50v 0805	**(1 spare)**
3	10uF	SMD Capacitor 20-25v	
1	100uH	SMD Inductor 1210 TDK	
1	78M05	Regulator +5V 500mA D2PAK	
1	AD9851BRSZ	IC DDS 180MHz Analogue Devices	
1	GALI-84+	Minicircuits Amplifier SOT-89	
1	PC Board	EME167-Ver2010 Board	
1	Instructions	EME167-Rev3 KIT	
1	30 MHz	QXO-14BAA Osc Module +5v	
1	IDC16/S	Header 2x8 16 Pin Female PCB Mount	
1	IDC16/P	Header 2x8 16 Pin Male PCB Mount	
1	CAB-IDC16	16 Way 1.27mm Ribbon Cable	15cm long
1	SMA33	SMA Female 1.6mm PCB Mount	
	70MHz L.P.F	**(180MHz DDS Clock)**	
1	4p7	SMD Capacitor NPO 50v 0805	
1	10pF	SMD Capacitor NPO 50v 0805	
1	33pF	SMD Capacitor NPO 50v 0805	
1	39pF	SMD Capacitor NPO 50v 0805	
1	68pF	SMD Capacitor NPO 50v 0805	
1	150nH	SMD Inductor 1008	
1	180nH	SMD Inductor 1008	
	OPTIONAL	**(Not Included in this Kit)**	
1	MMCX03	MMCX Female PCB mount connector	C1 (For external clock option)

DDS KIT1 TOP OVERLAY

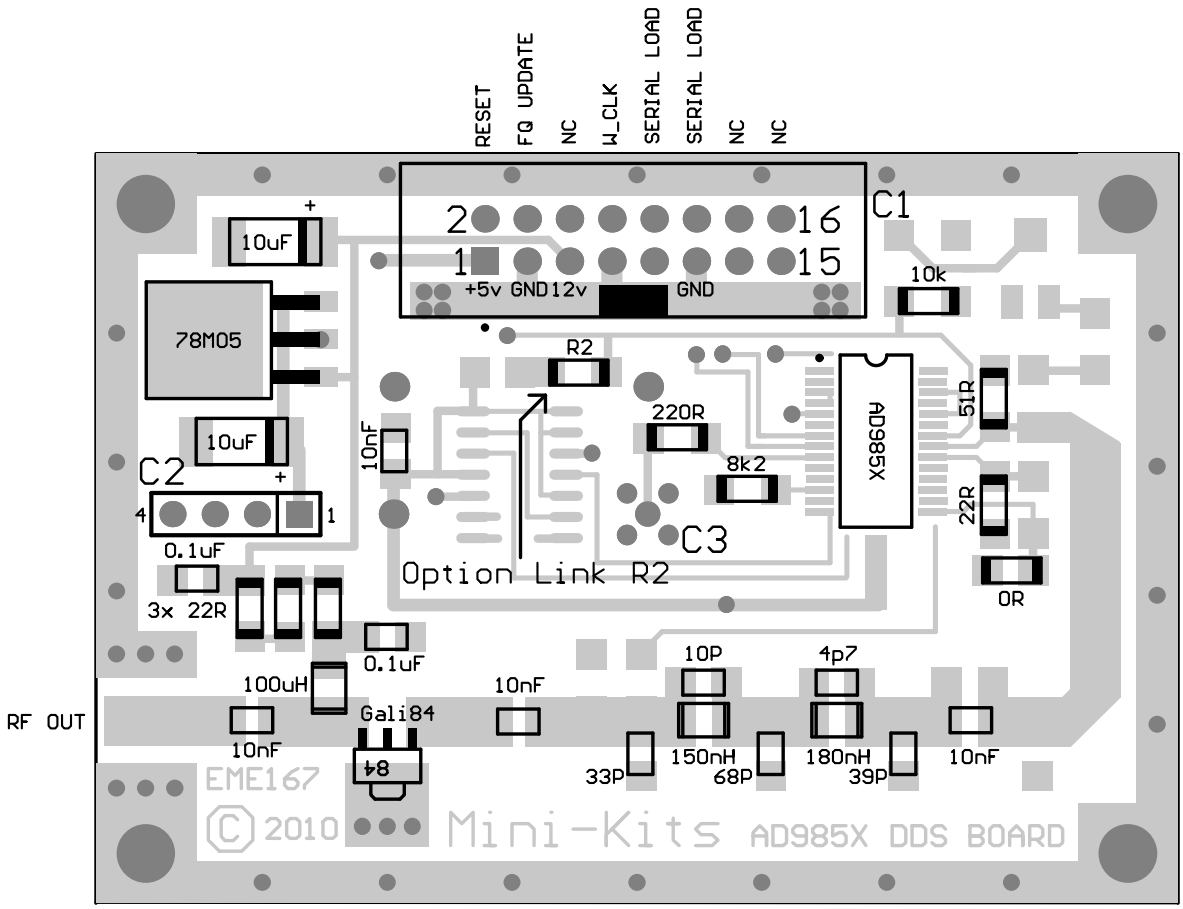

70MHz L.P.F SHOWN

DDS KIT1 BOTTOM OVERLAY

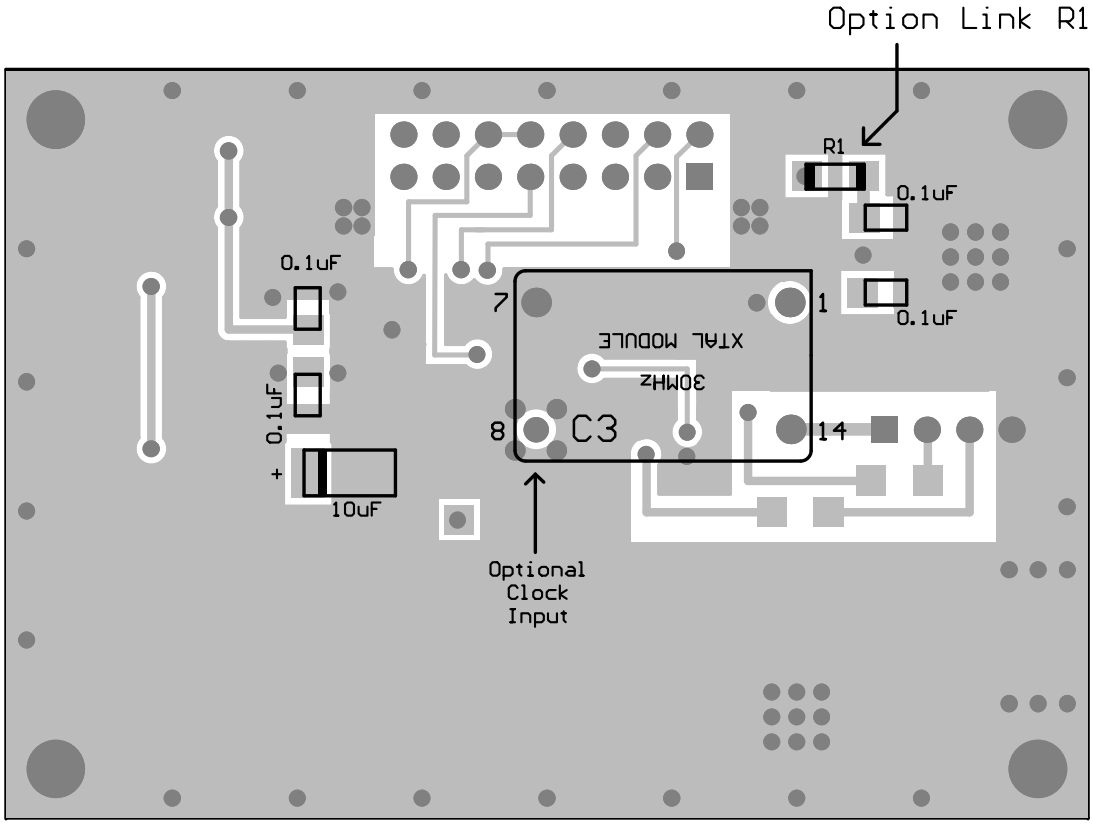

UPDATED 21/7/2015