Mini-Kits® 13/23CM PREAMPLIFIER EME103B VER3.

SPECIFICATIONS:	Frequency Range:	1150 – 2500MHz (Depends On Input Inductor Length & Filter)
	Gain:	Single Stage NE3210S01 1.2GHz 26dB 2.4GHz 24.5dB Dual Stage NE3210S01 / ERA-1 1.2GHz 38dB, 2.4GHz 36dB
	Noise Figure:	<1dB Typically 0.6dB (23cm Version with input filter) <2dB Typically <1.7dB (13cm Version without input filter)
	Power Supply:	+10 to +15volts Single Stage 15 mA / Dual Stage 65mA
	Website:	**www.minikits.com.au/eme103.htm**

DESCRIPTION: The Preamplifier has been designed to be easy to construct, & can be centre frequency tuned for use between 1200 & 2500MHz. The preamplifier is suitable for FM or SSB applications including Satellite & ATV reception. A low cost NE3210S01 Pseudomorphic Hetero– Junction FET, (PHEMT) as it is capable of very low noise figures of around 0.35dB @ 12GHz. The NE3210S01 was specifically designed as a low cost device for Satellite LNB's. The Preamplifier is easy to construct & has been designed to be used on either the 1200 or 2400MHz Ham bands, including the 1400MHz Seti Band. The preamplifier is essentially a broadband design & uses a single stage NE3210S01 when coax losses from the antenna are low, or as a two stage amplifier using an additional ERA1 MMIC when higher loss coaxial cable e.g. RG8 is used. The preamplifier is best mounted close to the antenna & incorporates RF decoupling so that power can be fed to the preamplifier via the cable. A number of surface mount components are used in the design to make the performance consistent so that it performs very close to the specifications as tested.

AMPLIFIER CIRCUIT: Refer to the circuit diagram. The input matching circuit consists of a 10pF capacitor & a wire loop L1, to match the 50ohm antenna input to the gate of the NE3210S01 HJ FET. The input circuit is essentially broadband & the loop can be adjusted in length & height that it sits above the PC board to optimize for a low noise figure match in the frequency band required. The input circuit also incorporates a 1000MHz high pass strip-line filter that rejects unwanted strong 430MHz Ham, & 900MHz Cellular signals. It is especially useful when transmitting on an uplink to an ATV repeater, or Satellite on the 430MHz band. The filter is not normally required when using the preamplifier on 2400MHz, & can be easily disconnected from the input of the preamplifier to improve the noise figure. The NE3210S01 HJ FET has around 26dB gain at 1200MHz, & is biased with a negative voltage on the gate lead. This allows the source leads to be directly connected to ground to make it stable & lower the noise figure. A second gain stage can be added to increase the total gain including the NE3210S01 to around 38dB. An ERA-1 MMIC with around 12dB gain was chosen due to its flat gain across the total 1200 – 2500MHz Frequency range.

POWER SUPPLY: Refer to the circuit diagram. The preamplifier uses a 78L08 +8 volt regulator to provide the primary voltage for the preamplifier. Power supply filtering capacitors are used to lower the regulator noise & decouple RF from entering the power supply voltage rails. Either +12v can be connected directly to the preamplifier board, or an optional inductor L4 can be fitted to the board allowing power that is fed up the coaxial cable to be used. An active bias circuit & DC-DC converter is used to bias the NE3210S01 FET. A ICL7660 IC produces a negative voltage from pin 5 which is controlled by the active bias circuit consisting of the BC857 transistor & associated components to provide a constant current through the FET, (Id 10mA optimum for lowest noise figure). The BC857 also provides a fail safe circuit to protect the FET if the negative voltage supply disappears from the ICL7660. The BC857 transistor does this by current limiting the supply to the FET by controlling the negative bias to the gate so that it is not destroyed. The LL4148 diode on the base of the BC857 provides for temperature compensation of the constant current circuit.

CONSTRUCTION:

1. To make construction easier, the PC Board supplied is a professionally made plated through hole board. Plated through earth holes are shown as dark colored pads on the PCB overlay diagram. To assist construction especially forming & mounting the inductors, please refer to the pictures on **www.minikits.com.au/eme103.htm**

2. If you are fitting a N connector to the input, then the first part of construction is to cut out & file the PCB along the line etched on the board to fit the connector. This should be done first before any components are mounted to the board so they are not damaged. Either a SMA PCB, (SMA09) or N type socket, (NS01) can be fitted to the input of the Preamplifier. **The N socket should not be soldered to the board until later on after all the components are mounted to the board, see the Hardware section.**

3. A 1/4 Wave printed circuit choke, & 1nF chip capacitor is used on the input of the preamplifier to decouple the negative bias to the FET. For use on the 23cm band, the chip capacitor should be used in position C2, & 13cm band C1. The position will affect the noise figure performance of

the preamplifier, especially on the 13cm band.

4. Follow the PCB overlay diagrams and circuits carefully, by checking the components and placing them onto the board. All SMD components are mounted on the track side of the board. To solder in the chip capacitors & resistors, a pair of tweezers are used to hold them in place, soldering one side first then the other side. Be careful when fitting the 78L08 regulator observing polarity, & to not short the regulators close spaced connections with solder. When fitting the Tantalum capacitors to be board, be careful with the polarity especially the one mounted on the output of the ICL7660 IC.

5. When installing the NE3210S01, lift the device from the static safe packaging with some fine pointy nose pliers or similar, & place it into position on the board. **The NE3210S01 leads are quite short so please refer to the PCB overlay diagram that shows where the device is to be aligned with regards to the circuit board connections.** The input lead is left unconnected until fitting the input inductor L1.

6. When soldering in the ERA1 amplifier, you need to first identify the input lead. The input connection on the ERA1 has a (white dot & beveled lead). Refer to the PCB overlay diagram for the component pin outs, & fit the amplifier in the mounting hole & solder the leads into place. **If you are building the single stage version, then solder some 0.7mm wire across where the ERA1 would normally be fitted for the dual stage version**

7. All inductors are constructed as per the instructions below, & are the length measured in mm (millimeters) before being formed into a hoop. **The colored Teflon insulation can be left on the wire used for L1.**

L1 (23cm band 28mm long), (1400 to 1700MHz 20mm long), (13cm band 14.0mm long). Silver wire wrap wire formed into a 6mm diameter 1/2 turn hoop bent around a drill bit or screwdriver blade. **L1 is mounted horizontally with the loop end sitting 1mm above the PC board. The end of L1 that connects to the gate, (input) leg of the NE3210S01 needs to be bent 2mm from the end towards the end of L1 so that it can reach the gate lead. Don't put any excessive stress on the PHEMT's gate leg.**

L2 is the same dimensions as L1 above but uses the 0.7mm Tinned Copper Wire. L2 is mounted straight up vertically.

L3 47nH SMD Coil is only required in the Dual Stage design. It can be substituted with 6 turns 0.4mm ECW wound on a 3mm I/d drill bit close wound.

L4 47nH SMD coil is only required if you are powering the preamplifier via the coaxial cable. It can be substituted with 6 turns 0.4mm ECW wound on a 3mm I/d drill bit close wound. **L4 should not be fitted unless you require the option,** as it will feed DC power down the coaxial cable when connecting +12 volts directly to the preamplifier board.

HARDWARE:

1. The preamplifier was designed to use either a N or SMA socket on the preamp input, & SMA on the output. No other types of connectors other than low loss microwave types, e.g. SMA with PTFE insulation should be used. It is not recommended that coaxial cable be directly connected to the preamp board unless you have experience with good quality 50 ohm termination.

2. If you are fitting the N connector to the input of the preamp then it can now be fitted. Cut & file the center pin of the N connector to a maximum length of 3mm. This will allow enough distance, & place less stress on the 10pF input chip capacitor & prevent it cracking when mounted on the board. Position the N connector, & using a >50W soldering iron with large tip, tack solder the connector into place to get it aligned. Then completely solder the connector to both sides of the PCB.

3. If the preamplifier is to be mounted in a box, then it can be simply done by cutting a hole in one end of a suitable box to fit the input N connector. The N connector can then be bolted to the box to fasten one side of the PCB. The other end of the board can be mounted the box with some metal spacers & 3mm bolts if required. For the preamplifier output connection, use a short length of 50 ohm Teflon coaxial cable, (e.g. RG316) to connect the output of the preamplifier to a suitable connector mounted on the box. Make sure that the connections used are suitable UHF construction to ensure that the preamplifier does not oscillate due to poor 50 ohm terminations. When using a metal box make sure that there is at least 1 inch spacing between the lid & the top of the PCB to avoid detuning , & or instability.

TESTING & ALIGNMENT:

1. Connect a +10 to +15 volt power supply to the preamplifier, & check that the power consumption is as per the specifications for either the single or dual stage version.

2. No alignment of the preamplifier should be required if it is constructed as per the instructions. If you have access to a Noise figure meter the input loop L1 can be adjusted length & height above the board to optimize the performance.

NOTES:

1. Chip components crack easily so if you have problems getting the kit going properly, check especially for broken chip capacitors on the antenna input, & throughout the signal path.

2. Most instability problems are caused by poor 50 ohm terminations on the output of the Preamplifier.

3. When using the Preamplifier on 2400MHz the input filter affects the noise figure by around 1dB increasing it to around 2.7dB NF. Cutting the 1000MHz input filter as shown on the PCB overlay diagram will improve the noise figure to around 1.7dB or less. The filter did not have any affect on noise figure or gain on 1200MHz

SINGLE STAGE PARTS LIST

RESISTORS

1x 220R	SMD 1206 Resistor
1 x 1K2	SMD 1206 Resistor
1 x 1K8	SMD 1206 Resistor
1 x 4K7	SMD 1206 Resistor
1 x 47K	SMD 1206 Resistor

CAPACITORS

3 x 10pF	SMD 0805 Chip Capacitor
5 x 1nF	SMD 0805 Chip Capacitor
1 x 10nF	SMD 0805 Chip Capacitor
4 x 10uF	SMD Electrolytic Capacitor

INDUCTORS, RF CHOKES, FILTERS

1 x Vishay 47nH SMD IMC1008 Coil L4

SEMICONDUCTORS

1 x LL4148	Diode **(sub MMSD4148T1G)**
1 x 3v3	SMD Zener Diode
1 x 78L08	Regulator 100mA
1 x BC857	SMD PNP Transistor
1 x ICL7660	SMD –Ve Voltage Gen IC
1 x NE3210S01	NEC PHEMT

MISCELLANEOUS

1 x PC Board	EME103B
1 x Instructions	EME103B

1 x 40mm Length Silver Plated wire wrap wire (L1)

1 x 40mm Length 0.7mm TCW (L2)

DUAL STAGE OPTION

RESISTORS

2 x 180R SMD 1206 Resistor

CAPACITORS

1 x 1nF SMD 0805 Chip Capacitor

SEMICONDUCTORS

1x ERA-1 Mini-Circuits Amplifier

INDUCTORS, RF CHOKES, FILTERS

1 x Vishay 47nH SMD IMC1008 L3

FOR PRODUCT SUPPORT
www.minikits.com.au/eme103.htm

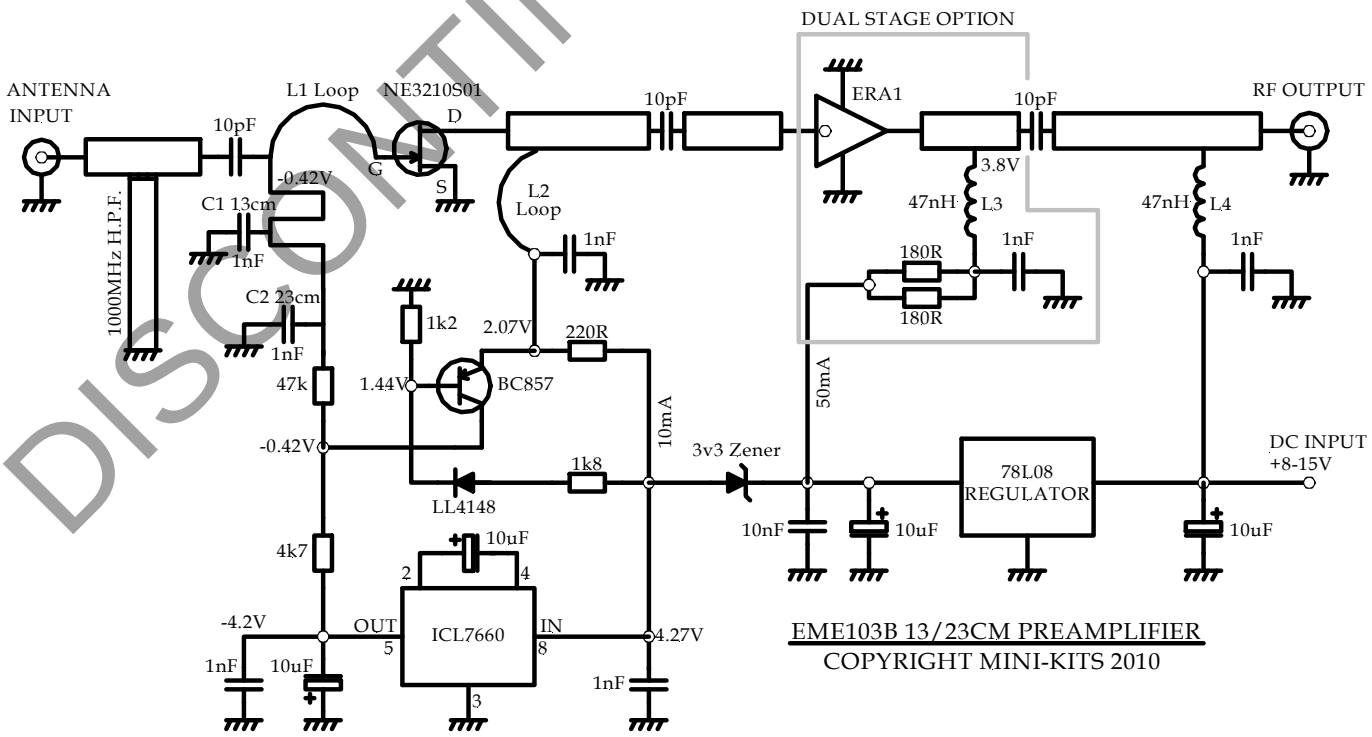

TOP PC BOARD OVERLAY

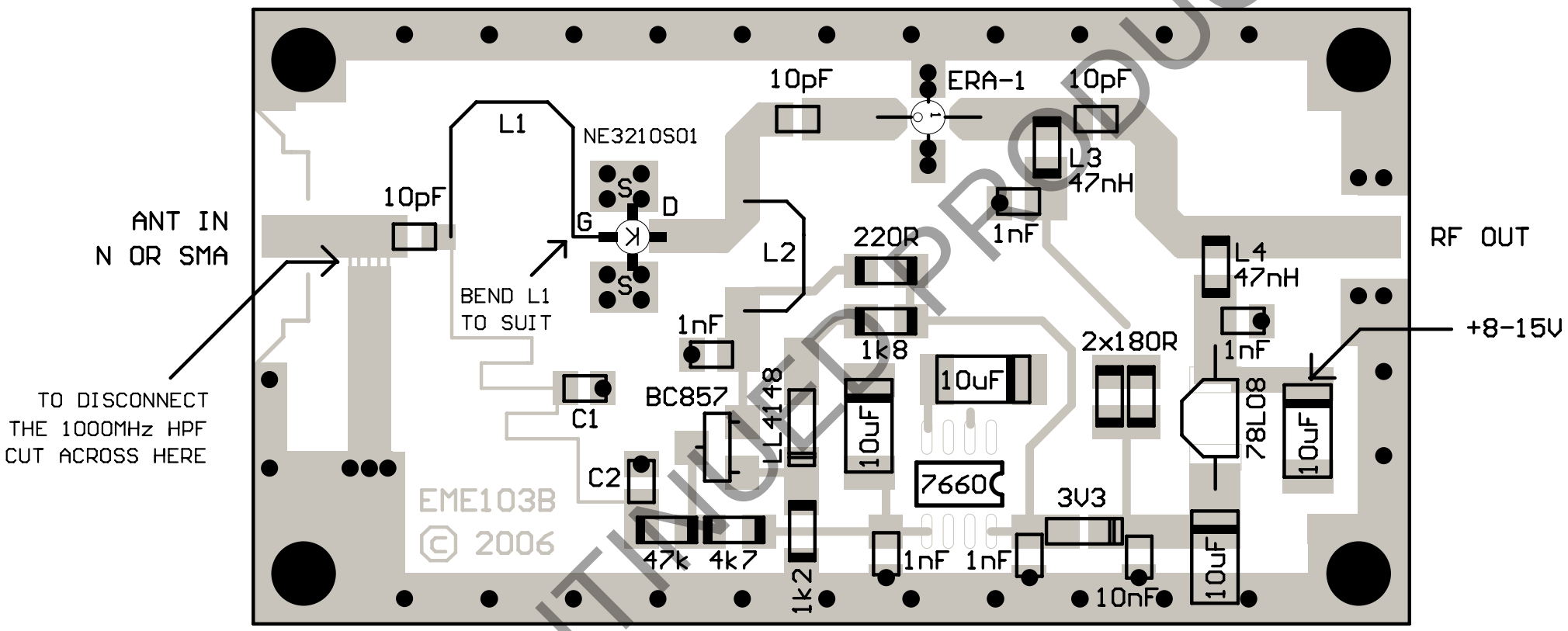

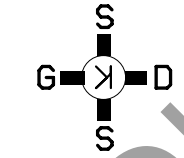

NE3210S01

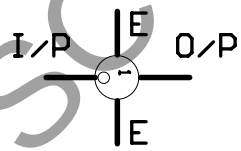

ERA-1

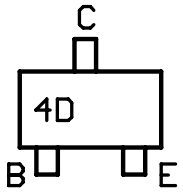

BC857

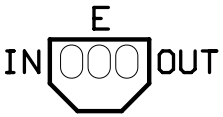

78L08

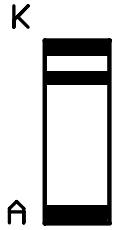

LL4148
3V3 ZENER

TANT
CAP

COMPONENT PINOUTS
TOP VIEW

● PLATED THROUGH
HOLES