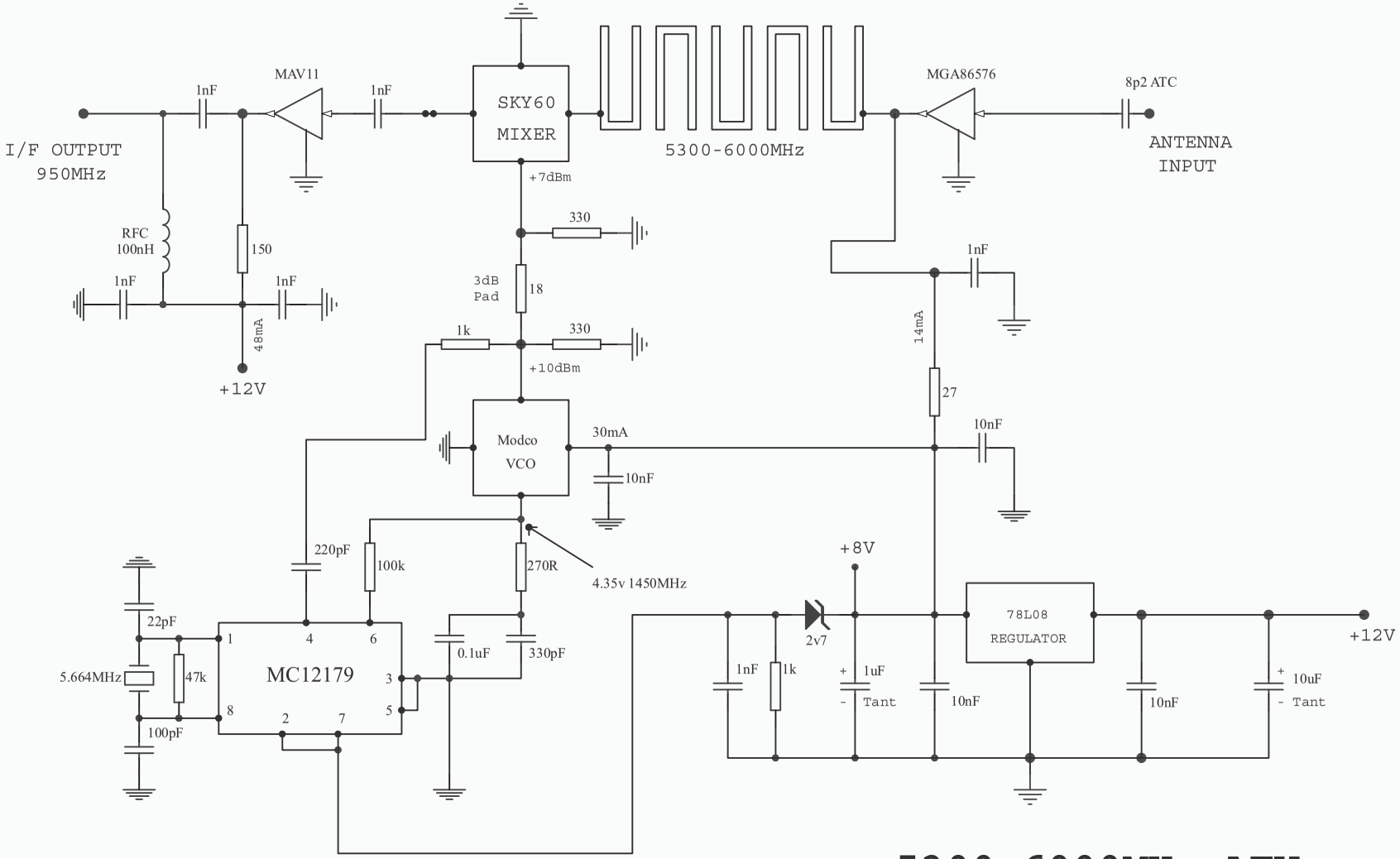

5300-6000MHz ATV DOWNCONVERTER

VK5EME96