SPECIFICATIONS: EME94 KIT

Frequency Range:	2350 to 2450MHz (5 Section Hairpin Filter)
RX Gain:	>23dB gain 2350 to 2440MHz
RX Noise Figure:	typically <2.6dB
Local Oscillator Input:	+7dBm, (5mW) @ 2256MHz (144MHz IF)
	+7dBm, (5mW) @ 1968MHz (432MHz IF)
TX RF Input Drive:	-10dBm (0.10mW) @ 144MHz
TX RF Output:	+19dBm (80mW) with -10dBm input @ 144MHz.
Spurious Output:	Refer to www.minikits.com.au/eme94.htm
Power Supply	RX stages +9vdc @ 80mA)
	TX stages +9vdc @ 120mA
Size:	PC Board EME94D 82 x 65mm
Kit Webpage:	**www.minikits.com.au/eme94.htm**

DESCRIPTION: The complete 2400MHz Transverter is built on a single 82 x 65mm size PCB, and should take around 4 hours to construct. Surface mount components have been used to make the Transverter compact, and predictable in performance. The Transverter is built around a VK5WA designed 5 Section Hairpin Coupled line filter which has a sharp 3dB roll off at around 2350MHz, with a response at 2250MHz of less than –20dB thereby providing a good SSB noise figure for a 144MHz I/F. The Hairpin filter is quite critical in design and relies on consistent PC board material. For this reason Arlon 572B has been used along with a professional PC board manufacturer that allows us to get the best performance from this design. The Transverter comes standard with a 144MHz I/F, but can be used with a 432MHz I/F. For 2401MHz Satellite operation it is suggested that a 432MHz I/F be used to leave 144MHz free for a 23cm uplink Transverter. The Transverter was designed to have a reasonable noise figure for general purpose terrestrial use, and it is expected that many will fit an external low noise preamplifier at the antenna. The power and I/F switching of the Transverter is best controlled by a Transverter Sequencer e.g., EME166 Kit which will give the correct RF drive level on TX, and will allow other options to be added later, including preamplifiers, power amplifiers, or coaxial relays etc.

RECEIVE CONVERTER: Refer to the circuit diagram. A 2.4GHz 1/4 wave transmission line on the RX Antenna input to ground, protects the MGA FET from static on the antenna input. Signals on the RX input are amplified by a MGA86563 MMIC, (25dB Gain 1.8dB NF) RF amplifier. The input to the MMIC uses a silver plated input inductor and Mica RF chip capacitor for matching to the MMIC and low loss. The Amplified signal is then switched by a HSMP3824 PIN diode to the Hairpin filter. This same dual PIN diode is reverse biased in TX mode and used to block RF from entering the RX. The receive signal is then filtered by the Hairpin filter which has around 2.5dB in-band loss. The filtered signal then passes to an ADE-35 mixer. The ADE-35 is a low cost 3500MHz +7dBm double balanced mixer which has around 8.5dB conversion loss, and is a small surface mount package. The 2400MHz input and 2256MHz L/O signals are mixed by the ADE-35 to produce a 144MHz IF output signal and mixing products. A simple 50ohm 144MHz diplexer is used on the output of the mixer to provide a constant 50ohm load for all the frequencies produced by the mixing process, and only allows 144MHz, +/-10MHz signals to pass through. The IF signal is then switched through a HSMP3824 PIN diode to a MAR4 I/F amplifier that amplifies the signal by around 8dB.

TRANSMIT CONVERTER: Refer to the circuit diagram. For a -10dBm 144MHz input signal the Transverter typically produces +19dBm (80mW) output from the ERA5 amplifier on 2400MHz. Maximum input to the ADE-35 mixer on TX should not exceed 0dBm (1mW). Driving the mixer harder causes spurious output and could damage it. A 144MHz signal is input to the TX I/F input and is switched through a HSMP3824 PIN diode and passes through the 50ohm 144MHz diplexer to the ADE-35 mixer. The 144MHz signal is mixed with the 2256MHz L/O signal producing a 2400MHz signal and mixing products out of the mixer. The output of the mixer is filtered by the 5 Section Hairpin Coupled line filter which passes only the 2400MHz signal and rejects the 144 and 2256MHz signals and mixing products. The 2400MHz signal is then switched through a HSMP3824 PIN diode to the input of an ERA3 driver amplifier. The signal is then amplified by the ERA3, (+18dB) to +1dBm and then further Amplified by an ERA5 (+18dB) which produces around +19dBm, (80mW) output to the TX output connection.

CONSTRUCTION:

1. The PCB supplied is a professionally made plated through hole circuit board and requires no drilling of holes for components. Good quality RF connectors are required on the 2400MHz and local oscillator connections on the board to minimize any losses. The 144/430MHz I/F connections can be connected directly with mini 50ohm Teflon coax to save cost. Because the boards are hot air level soldered for protection of the copper, solder can leach causing shorts etc, so check the board thoroughly before starting any construction and clean up if required. Also check the drilled hole for the MGA Fet, and where the ERA/MAR Amplifiers are mounted for any copper that could cause shorted connections. Use a sharp scalpel cut away any copper that may still be present.

2. **Refer to the construction images of the prototype on the Mini-Kits web site (www.minikits.com.au/eme94.htm).** With previous Kit notes it was suggested to solder 20mm wide thin Tinplate strip around the PC board to form the sides of an enclosure. This was used to minimize flexing of the board, and also allowed easier mounting of the SMA connectors. This is not recommended unless you have extensive metalworking experience, and a workshop with suitable tools. **The easier option is to just solder SMA connectors directly to the board, and then use some 5mm wide PC board or tinplate, and solder this under the board to strengthen if required**. A more detailed description to fabrication a tinplate enclosure is at the end of these notes.

2. Next you can start soldering the components onto the board. Follow the PCB overlay diagram and circuit carefully, by checking the components and placing them onto the board. **We have already mounted the MGA86563 on the board, as it is probably to difficult for many constructors.** Most components are mounted on the track side of the board. To solder in the chip capacitor and resistors, a pair of tweezers are used to hold them in place, soldering one side first then the other side. The standard MAR/ERA amplifiers can be easily made into a SMD version by pressing down on the two opposite leads with either a small pair of flat tipped pliers, or tweezers until the leads are the same height as the bottom of the device. When soldering in the ERA/MAR amplifiers, identify the input connection, (white dot and beveled lead) and fit the amplifiers onto the board and solder the leads into place.

3. To make L3, strip the Teflon outer insulation from the silver wire wrap wire supplied, and cut it to a length of 10mm. Form the wire into a 8mm diameter 1/2 turn hoop, bent around a drill bit or screwdriver blade. **L3 is only just long enough to be soldered from the 10pF input capacitor and through the hole in the board to the MGA86563 input lead.**

4. Mount the PCB pins to the power connections on the board **(Ground plane Side) of the board.** The feed-through capacitors can also be soldered to the bottom of the board, and insulated hookup wire used to connect wires from points A to A, and B to B as per the diagram, and then connect to the two +9v RX and TX feed-through capacitors.

ENCLOSURE:

1. If you decide to wrap the board in tinplate, then the sharp corners of the board will need to be rounded with a scalpel before fitting the tinplate strip, which will have a slight curve on all corners when bent. **It might be easier to cut 2 lengths for the long sides of the PC board and then 2 more for the short sides as trying to bend something in a single length is very difficult.** Centre the board in the tinplate enclosure by using a steel ruler or vernier caliper, and tack solder on the bottom side of the board. When the board is correctly aligned, then solder all the way around on the top side of the board, and clean the flux with Isopropyl alcohol.

2. Next prepare the connectors to suit the enclosure. I recommend using vertical type SMA female types (SMA09), that have 4 legs that can be easily broken off with pliers, and the rear of the connectors flange filed flat. Using a small Pin Vice, drill the holes for the SMA connectors and feed through capacitors, starting with a small 1mm drill bit, and working up in size to around 3mm for the SMA connectors. Use a vernier caliper to mark the holes for the SMA connectors a half a millimeter above the printed strip-lines. This will avoid any damage to the strip-line when drilling through the tinplate. I recommend drilling by hand using a Pin vice to avoid damage to the board or accidents. When you have just about cut through the tinplate, you may be able to cut it away with a scalpel on the inside of the enclosure so you don't damage the board. **Do Not use an electric drills or as you will likely damage the board or cut fingers.** However the enclosure can be mounted in a vice, and a drill press manually rotated with larger drill sizes to cut the holes avoiding accidents. Trim away any tinplate or swarf around the holes with a scalpel, and check for any shorts from the tinplate to the boards strip-lines.

4. Mount the SMA connectors and feed-through capacitors by solder tacking them into place, and check that they are straight before fully soldering into place.

OPTIONS:

1. An optional I/F of 432MHz can be used with this Transverter board. Component values for the different I/F frequencies are listed in the parts list.

2. For control of the Transverters power and I/F switching, it is suggested that the EME166 sequencer Kit be used. The sequencer Kit is a good option if you are planning on adding a

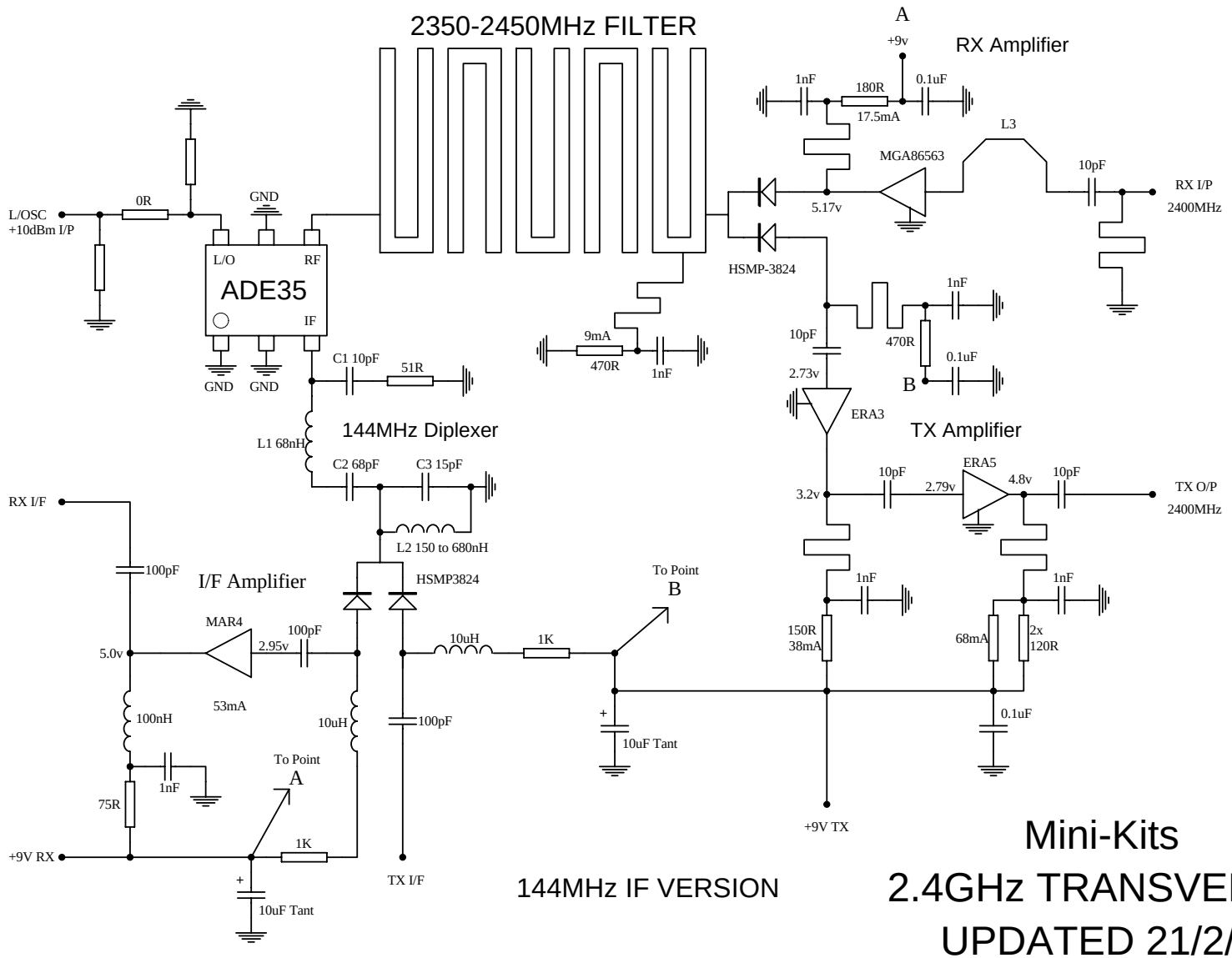
2350-2450MHz FILTER
A
+9v
RX Amplifier
1nF
180R
0.1uF
17.5mA
L3
MGA86563
10pF
RX I/P
2400MHz
5.17v
HSMP-3824
L/OSC
+10dBm I/P
0R
GND
L/O
RF
ADE35
IF
GND
GND
C1 10pF
51R
9mA
470R
1nF
10pF
1nF
470R
0.1uF
B
2.73v
ERA3
144MHz Diplexer
L1 68nH
C2 68pF
C3 15pF
TX Amplifier
ERA5
10pF
2.79v
4.8v
10pF
TX O/P
2400MHz
3.2v
RX I/F
L2 150 to 680nH
100pF
I/F Amplifier
HSMP3824
To Point
B
1nF
1nF
MAR4
100pF
2.95v
10uH
1K
150R
38mA
68mA
2x
120R
5.0v
53mA
100nH
10uH
100pF
10uF Tant
0.1uF
To Point
A
1nF
75R
+9V TX
+9V RX
1K
TX I/F
10uF Tant
144MHz IF VERSION
Mini-Kits
2.4GHz TRANSVERTER
UPDATED 21/2/16

preamplifier, power amplifier, or antenna relays etc later on. Use a 7809T 9 volt regulator to power the EME166 sequencer which will then supply +9 volt RX and TX voltages to the Transverter.

LOCAL OSCILLATOR: The Transverters L/O input is stated as requiring a 2256MHz input of +7dBm to drive the mixer correctly. **Test results indicated that a good level is around +3dBm which reduced the spurious output from the mixer to much lower levels.** The EME94 board has room to fit an optional attenuator using SMD resistors if the L/O input is too high. **Excess drive could damage the Mixer.** Using the recommended EME2256-MLT Multiplier Kit, you should get around +8dBm, (6mW) typical output, and this is fine for directly driving the mixer. The L/O and multiplier should be kept shielded from the EME94 board to avoid the 2256MHz L/O appearing at high level on the TX output of the Transverter. Some 2256MHz L/O will unavoidably be transmitted through the board material into the TX stages but once a power amplifier and or high gain Antenna is added the 2256MHz output will be greatly reduced.

POWER CONNECTIONS: There are 2 power connections to the Transverter board, +9V TX to power the Transmit section, +9V RX for the Receiver section. **Using a multimeter check that there are no shorts on the RX and TX +9v rails, and Input and Output connections of the ERA and MGA amplifiers to GND before connecting power.**

TESTING: The Transverter requires no tuning, and with the correct L/O and TX drive levels, the Transverter should operate as per the specifications. **Test results indicated that a L/O input of around +3dBm and a 144MHz I/F input of around –10dBm gave much better reduction of spurious output from the mixer.** These levels are still plenty to produce > +10dBm output on transmit.

POWER AMPLIFIER OPTIONS: The Transverter is capable of producing up to +19dBm output @ 1dB compression, but should be operated up to +10dBm so that a clean output is produced. The best way to reduce the output is to decrease the 144MHz drive until the required output on 2400MHz is achieved. The lower 144MHz drive will also reduce the unwanted mixing frequencies out of the mixer, and produce a cleaner output.

NOTES:

1. Chip components crack easily so if you have problems getting the Kit working, then check that the chip capacitors are not damaged or that you may have forgot to solder one. Other components that have caused problems are open circuit chip inductors so test then with a multimeter.

PARTS LIST

RESISTORS

1 x 0R	SMD 1206 Resistor
1 x 51R	SMD 1206 Resistor
1 x 75R	SMD 1206 Resistor
2 x 120R	SMD 1206 Resistor
1 x 150R	SMD 1206 Resistor
1 x 180R	SMD 1206 Resistor
2 x 470R	SMD 1206 Resistor
2 x 1K	SMD 1206 Resistor

CAPACITORS

5 x 10pF	SMD 0805 Chip Capacitor **(1 spare)**
4 x 100pF	SMD 0805 Chip Capacitor **(1 spare)**
7 x 1nF	SMD 0805 Chip Capacitor **(1 spare)**
4 x 0.1uF	SMD 0805 Chip Capacitor **(1 spare)**
2 x 10uF	SMD Tantalum Capacitor
2 x FT1000	1nF Feed-through Capacitor

INDUCTORS

2 x L10u-1210	10uH SMD 1210 Inductor
1 x L100n-1008	100nH SMD 1008 Inductor

SEMICONDUCTORS

1 x ADE-35	Mini-Circuits Mixer
1 x ERA-3	Mini-Circuits Amplifier
1 x ERA-5	Mini-Circuits Amplifier
1 x HSMP3824	Avago PIN Diode SOT-23
1 x MAR-4	Mini-Circuits Amplifier
1 x MGA86563	Avago GaAs MMIC **On Board**

MISCELLANEOUS

1 x PC Board	EME94 Board
1 x Instructions	EME94 KIT

1 x 50mm length wire wrap wire (Silver L1)
4 x PCB 0.9mm PCB pin

I/F DIPLEXER OPTION

C1	10pF	50-144MHz	4p7 432MHz
C2	68pF	50-144MHz	10pF 432MHz
C3	15pF	50-144MHz	6.8pF 432MHz
L1	68nH	50-144MHz	4.7nH 432MHz
L2	150nH	50-144MHz	10nH 432MHz

FOR PRODUCT SUPPORT
www.minikits.com.au/eme94.htm

TOP PC BOARD OVERLAY

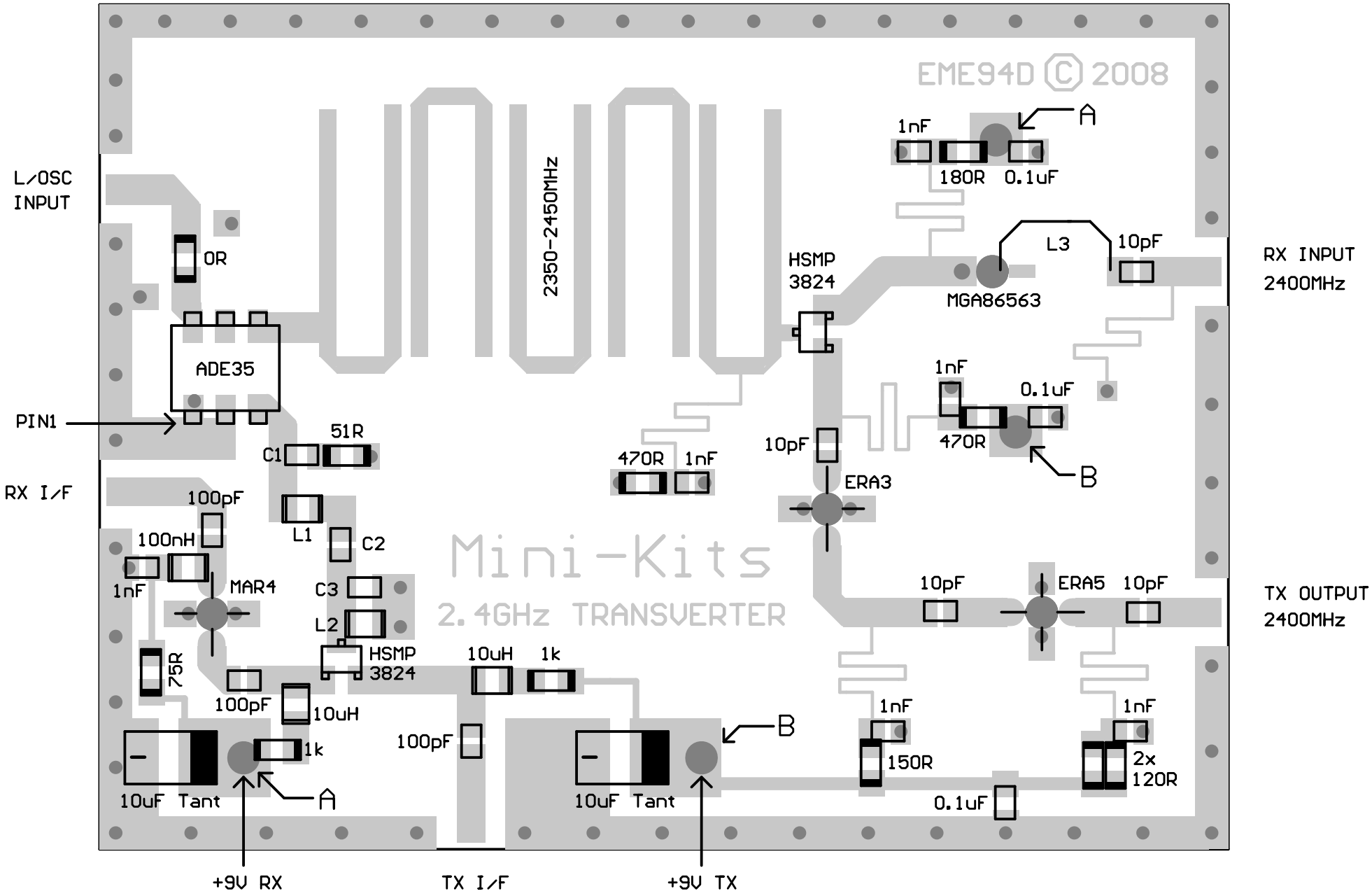

UPDATED 21/2/16

For mounting of the MGA86563 refer to the EME94 Kit webpage