SPECIFICATIONS: EME167 KIT2

Frequency Range:	0.1 to 35MHz (180MHz clock)
Board Interface:	+5vdc logic input and outputs
Clock:	On-board CMOS clock module or External Clock up to 180MHz (30MHz using x6 mult AD9851)
RF Output:	2 x I/Q Clock outputs 90 degrees phase shifted 0 to 35MHz +5 Volts
Spurious Output:	With reference to the Fundamental Output @ 0dBm, Unable to measure due to being rich in harmonics
Power Supply:	+12vdc 60mA (EME167 KIT2 PCB only)
Size:	PC Board 65 x 45mm
Kit Webpage:	**www.minikits.com.au/eme167.htm**

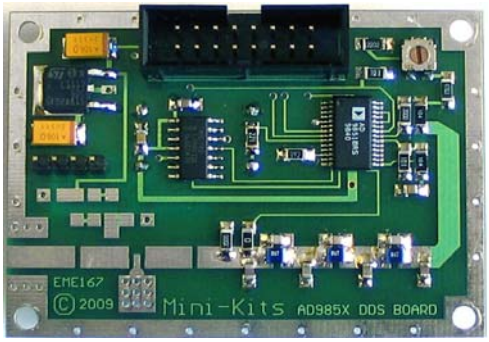

DESCRIPTION: If you are building the complete I/Q DDS VFO Kit then please refer to the additional notes for these Kits before reading this document. This document refers to the use of the EME167 KIT2 along with the EME170 DDS controller Kit and dd_synth_ver2.x software. This module can also be used with the EME190 DDS Controller and M1-DDS software.

The Basic AD9851 I/Q DDS Kit can be used for various SDR projects that use a switching type mixer using your own micro-controller and software, or it can be used with the Mini-Kits EME170 DDS controller Kit to construct a simple I/Q DDS VFO. Mini-Kits only supports basic software to use with this Kit, but the source code for the PIC Microcontroller is available if you want to change it for your own application. The Kit uses the Analogue Devices AD9851 DDS chip, and supports the serial load functions of the AD9851 chip only. The DDS output is filtered with a 70MHz low pass filter and then the sine wave is squared by the onboard high speed comparator to produce a square wave output which is processed by two D type flip flops to produce two 90 degree phase shifted square wave outputs. The board interface connector has most of the commonly required digital connections to and from the DDS chip that are used in various DDS, and or SRD project designs.

BOARD DESIGN: The PC Board is a professionally made plated through hole FR4 board that uses a single analogue and digital power supply and ground. No attempt was made to use separate supplies and grounds as the improvement on reducing any noise would be minimal.

AD9851 DDS: The following notes refer to the 180MHz AD9851 DDS chip. The AD9851 is capable of generating a frequency agile sinusoidal output frequency to around 70MHz, with a tuning step of 0.01Hz. The onboard high speed comparator can be used to generate a high quality square wave output. The AD9851 uses a 10 bit D/A converter, and uses a high clock speed that allows a maximum Spurious Free Dynamic Range, SFDR of > 43dB. This may not be quite good enough if fed straight into a mixer for high performance Radio applications, but is quite ok for many Radio projects including signal generators and general coverage receivers. **Please refer to the AD9851 Data sheet on the Analogue Devices web site.**

POWER SUPPLY: Refer to the circuit diagram. The DDS board interface connector **(C1)** requires +12v to power the board. An onboard 78M05 +5v regulator is used to power the AD9851, clock and any other +5v circuitry. The AD9851 requires +5v for the analogue AVDD, +5v for the digital DVDD, and a single +5v supply is used for both. The board has the option of an external +5v input on connector C1, so the +5v regulator can be removed if not required.

CLOCK OSCILLATOR: The board has been designed to suit a +5v clock module in a conventional DIP, (9x14mm) package. Many low cost +5v clock modules produce more than +5v P-P output, and this can cause erratic frequency output from the AD9851 DDS. A 220R resistor is used on the output of the clock module to slightly reduce the output so it does not overdrive the DDS clock input pin 9. For the various combinations of clocks and clock multiplier, refer to the AD9851 data sheet. An external clock can be fed into the **(C3)** connection on the board for use with external GPS locking of the DDS.

DDS DAC OUTPUT and FILTER: The DDS DAC sine wave output on pin 21 is filtered by a 5th order 200ohm low pass Elliptic filter with a cut off frequency of 70MHz, and it reduces

aliases and quantization noise from the DAC output. The DAC output on Pin 20 is terminated with a 100ohm resistor, and a 8k2 resistor on the DAC_Rset pin 12, sets the DAC output current. The 70MHz filter output is then fed into pin 16 of the DDS to the +ve input of a high speed comparator. The combined DDS DAC outputs from pins 20 and 21 are filtered with a 0.1uF capacitor, and the DC voltage is fed into pin 15 of the DDS to the –ve input of the high speed comparator. The voltage on pin 15 can be adjusted with a small 10k ohm trim-pot to balance the square wave output signals from pins 13 and 14 of the DDS. The square wave outputs from pins 13 and 14 are 180 degrees shifted to each other and are further processed by a 74AC74 divide by 2 to produce the two 90 degrees phase shifted I and Q outputs.

CONSTRUCTION:

1. This Kit is for advanced constructors only that have some experience in using SMD components. This Kit many be a challenge for some due to the very fine pitched DDS chip that needs to be soldered onto the board. Many of the other conventional sized SMD components are easily fitted. The PC board supplied is a professionally made plated through hole board to make construction easier. Plated through earth holes are shown as dark colored pads on the PCB overlay diagram. Earth connections do not have to be soldered on both sides of the board as they are plated through. To assist construction especially with which side of the board the components are mounted, please refer to the PCB overlay diagrams in these notes, and pictures on the web site, www.minikits.com.au/eme167.htm

2. Follow the PCB overlay and circuit diagrams carefully, by checking the components and placing them onto the board. There are a number of components mounted on both sides of the board.

3. If you have purchased a Kit that already has the AD9851 chip soldered to the board, then go on with fitting the remaining components. If you are going to fit the chip yourself then it should be fitted first. **The chip should only be fitted by very confident and experienced constructors. Mini-Kits will not replace any damaged chips or PC boards.**

4. The first part of construction is to fit the AD9851 chip to the board. Initially line the chip with the tracks on the board and tack solder two pins on diagonal sides of the chip. Use a magnifying glass and make sure that the chips pins are aligned before soldering the rest of the pins. **The shiny tracks can give the illusion that the chip is aligned if the light falling on the board is not direct, and from an angle**. Some moving of the chip may needed by using the soldering iron on either of the tack soldered pins, and pushing the chip slightly to fully align it. Apply liquid flux along one side of the chip and then tin the soldering iron with a small amount of solder. Place the soldering iron tip side on to the chip, hold it against a number of pins at the same time and then pull the iron tip away from the chip. Do this along the full length of the chip and check under a magnifying glass for any bridges. Bridges can be fixed by applying solder flux to the chips pins and using the soldering iron in the same way as soldering to remove the bridges. Do not feed solder into the chip pins else you will probably bridge the pins.

5. Next part of construction is to start with the small chip resistors, capacitors, and 74AC74 chip using a pair of tweezers to hold them in place when soldering. Be careful when fitting the components in the filter as any mistakes with mixing them up will affect the filters response. This could be very difficult to track down later on without fully replacing all the filter components. Then solder the SMD regulator IC, and larger SMD Tantalum capacitors to the board. If you are fitting a crystal oscillator module to the board then please be careful that you fit it the correct way around on the board.

6. R1 (0R Link) should not be fitted if you are using the EME170/190 controller Kits. This is an option for those that are using their own microcontroller hardware and are using an external +5vdc supply. **R2 (0R Link) should be fitted If you are using the EME170/190 controller and Mini-Kits software,** and grounds the reset line on the DDS to suit the software.

7. Fit the 16 Pin IDC header connector, **(C1)** to the board. Be careful when fitting noting the polarity of the IDC keyway cut out, so that it is aligned with the board overlay legend. **Mistakes here could cause damage to the circuitry if the IDC header has been reversed.**

CONNECTIONS:

1. 1. If you are using either the EME170, or EME190 PIC controller board then the 16 Pin Header on either boards is simply connected to the 16 pin Header **(C1)** on the DDS Board. If the DDS board is being used with another micro-controller application, then refer to the PC Board overlay diagram for the signal and power supply requirements for Header **(C1)** on the board.

2. Fit the 4 pin PCB Header plug **(C2)** to the PC board observing polarity. Use the remaining 16 way ribbon cable and slice it to 4 way and fit the 4 way Header socket. The outputs are suitable to directly connect to many I/Q switching mixers. To avoid interference and excessive cable capacitance only a short ribbon cable should be used to connect the I/Q signals and GND to a switching mixer.

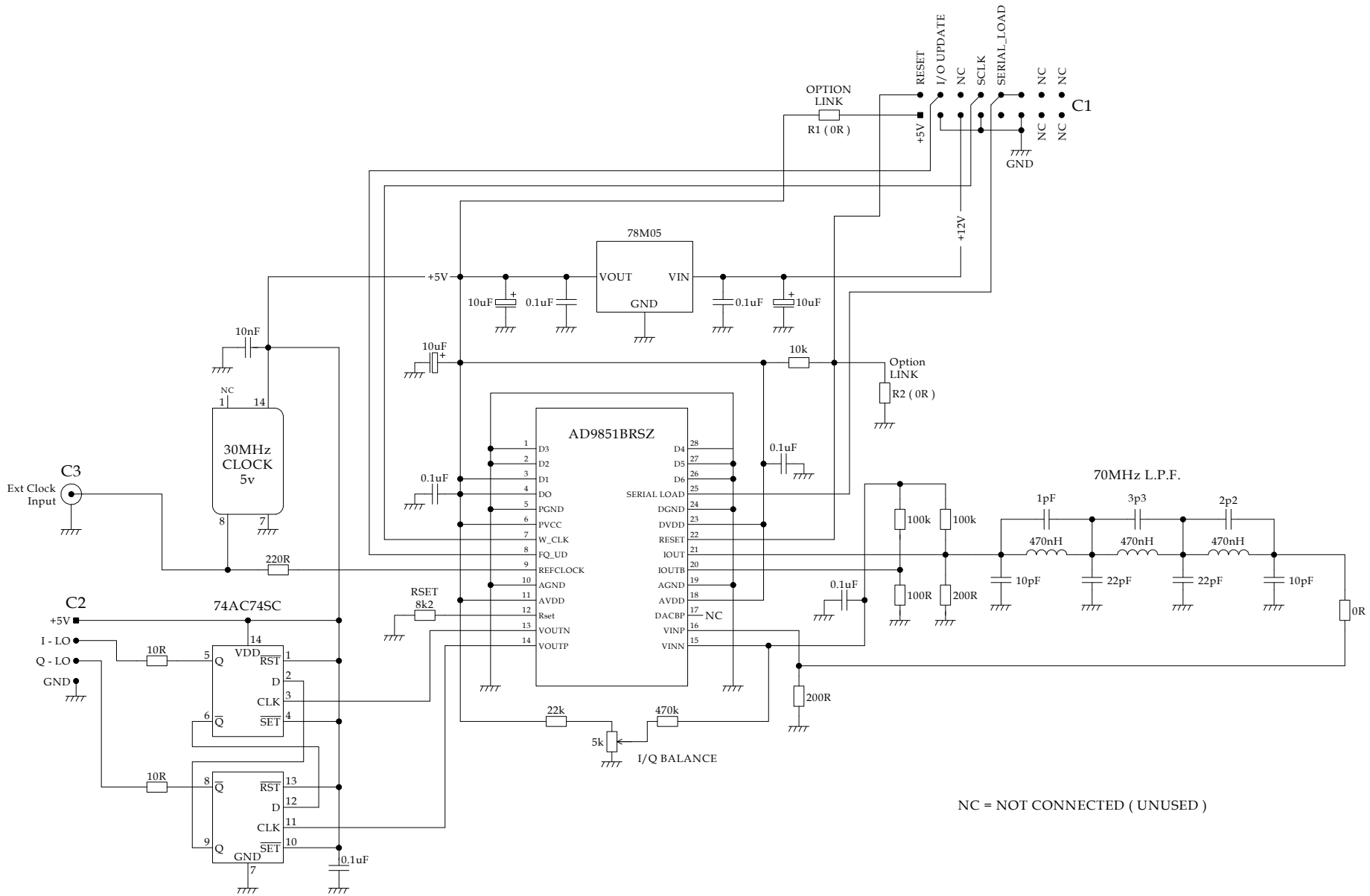

BASIC AD9851 IQ DDS KIT

DRAWN	MINI-KITS
DATE	7-1-15
PROJECT	AD9851 IQ DDS KIT
FILE	EME167KIT2-Rev3.SKF

3. For using an external clock to the DDS, an optional MMCX socket or coaxial cable can be directly connected to **(C3)** on the board.

TESTING:

1. Be careful when connecting an external power supply to the DDS board. Connecting voltages higher than +5v to the +5v input will damage the AD9851 chip.

2. The testing assumes that you have the EME167 DDS board connected to a EME170 DDS Controller Board with LCD module and backlight. Connect a suitable +12 volt power supply with current limiting, or a 0.5 Amp fast blow fuse inline to the power supply input to the EME170 board. Check that the EME167 and EME170/LCD combination is drawing less than 150mA.

3. If you have not set the EME170 Calibration Menu to suit the DDS then power down the boards and press the **Cal button (B)** in and power up the boards. The display should show (ENABLE RPT NO). Release the CAL button and press it again and again to cycle through the menu settings. Set the DDS O/P DIVIDER to DIVIDE BY 2 so that the LCD display will show the correct frequency output that is produced from the I/Q outputs. The maximum frequency that the I/Q outputs can produce is 35MHz which is half the DDS frequency of 70MHz. All options can be changed by turning the rotary encoder and then pressing the Cal button. When you have completed all the settings, another press of the Cal button will save the settings to the eeprom in the PIC and return the display to normal. **(Refer to the EME170 Kit notes for more information).**

4. It is very difficult to check the output spectrum from the I/Q outputs as they are square waves that contain harmonics. The 74AC74 chip is rated at 95MHz minimum so will work fine with inputs up to 70MHz for a 35MHz divided by two output. The levels and square wave outputs could be checked with a very high frequency storage oscilloscope if you have access to one.

5. The 5k trim-pot can be used to adjust the phase shift between the two I/Q outputs by feeding them into the A and B inputs of an oscilloscope. Set the frequency to 1MHz so that you can easily see the square wave signals, and adjust the trim-pot to make them 90 degrees shifted to each other.

OPTIONS:

1. For all information relevant to the AD9851 including clock frequencies and software etc, please refer to the AD9851 Data sheet on the Analogue Devices website. Mini-Kits cannot supply any technical or software support for your specific application.

2. If an external clock is used then it should have a maximum of +5 volts p-p output. The clock can be fed into the board using a MMCX connector **(C3)** or by a direct coaxial cable connection. Some CMOS oscillator modules produce higher P-P output levels than the voltage that they run on, and this could cause possible damage or the DDS to not work correctly. The 30MHz 5v clock module used on the EME167 board uses a 220ohm resistor inline to reduce the output level so as not to overdrive the AD9851 clock input.

3. If you require a RF sine wave digital output for a simple signal generator project, then please use the EME167 KIT1.

NOTES:

1. For any issues please refer to the Kits webpage www.minikits.com.au/eme167.htm on the Mini-Kits website.

2. The EME167 IQ DDS is compatible with the EME150, EME170, and EME190 PIC Controller boards. The HF-DDS, and M1-DDS software supports the EME150/190 PIC controller boards, and can be used with the AD985x and AD995x series DDS chips. The dd_synth_ver2.x software only supports the EME170 PIC controller board and can only be used with the AD985x series DDS chips.

3. There are some limitations when using the IQ DDS with the EME150/190 and software due to the AD9851 having a maximum frequency output of 35MHz. The software includes all the Ham bands up to the 430MHz 70cm band, but the AD9851 DDS can only be used up to the 12M 24MHz band when using a 9MHz IF.

4. The I/Q DDS can be easily used with the SOFTROCK series of Kits by Tony Parkes. The I/Q outputs can be fed directly into pins 2 and 4 of the FST3253 chip. The connection between the I/Q DDS board and Softrock can be done using a short length of standard ribbon cable. For more information on Suitable software etc please see the I/Q DDS VFO Kit notes.

QTY	PART #	DESCRIPTION	BOARD #
	PARTS LIST		
3	0R	1206 SMD Resistor	**(Link R1 / R2)** Fit R2 for use with EME170/190 Controller
2	10R	1206 SMD Resistor	
1	100R	1206 SMD Resistor	
2	200R	1206 SMD Resistor	
1	220R	1206 SMD Resistor	
1	8K2	1206 SMD Resistor	
1	10K	1206 SMD Resistor	
1	22K	1206 SMD Resistor	
2	100K	1206 SMD Resistor	
1	470K	1206 SMD Resistor	
1	ST-4EA-5K	Trim-pot 5K 4mm SMD	
7	0.1uF	SMD Capacitor X7R 50v 0805	**(1 spare)**
2	10nF	SMD Capacitor X7R 50v 0805	**(1 spare)**
3	10uF	SMD Capacitor 20-25v	
1	74AC74	IC Dual D Type Flip Flop SOIC14	
1	78M05	Regulator +5V 500mA D2PAK	
1	AD9851BRSZ	IC DDS 180MHz Analogue Devices	
1	PC Board	EME167-Ver2010 Board	
1	Instructions	EME167-KIT2-Rev3 KIT	
1	30 MHz	QXO-14BAA Osc Module +5v	
1	IDC16/S	Header 2x8 16 Pin Female PCB Mount	
1	IDC16/P	Header 2x8 16 Pin Male PCB Mount	
1	CAB-IDC16	16 Way 1.27mm Ribbon Cable	25cm long
1	HDP4P	Header 4 Pin PCB Male 2.54mm	**(C2)**
1	HDS4P	Header 4 Pin PCB Female 2.54mm	
4	HDS PIN	Header Pin 2.54mm	For HDS4P
	70MHz L.P.F	**(180MHz DDS Clock)**	
1	1.0pF	SMD Capacitor NPO 50v 0805	
1	2.2pF	SMD Capacitor NPO 50v 0805	
1	3.3pF	SMD Capacitor NPO 50v 0805	
2	10pF	SMD Capacitor NPO 50v 0805	
2	22pF	SMD Capacitor NPO 50v 0805	
3	470nH	SMD Inductor 1008	
	OPTIONAL	**(Not Included in this Kit)**	
1	MMCX03	MMCX Female PCB mount connector	C1 (For external clock option)

I/Q DDS KIT TOP OVERLAY

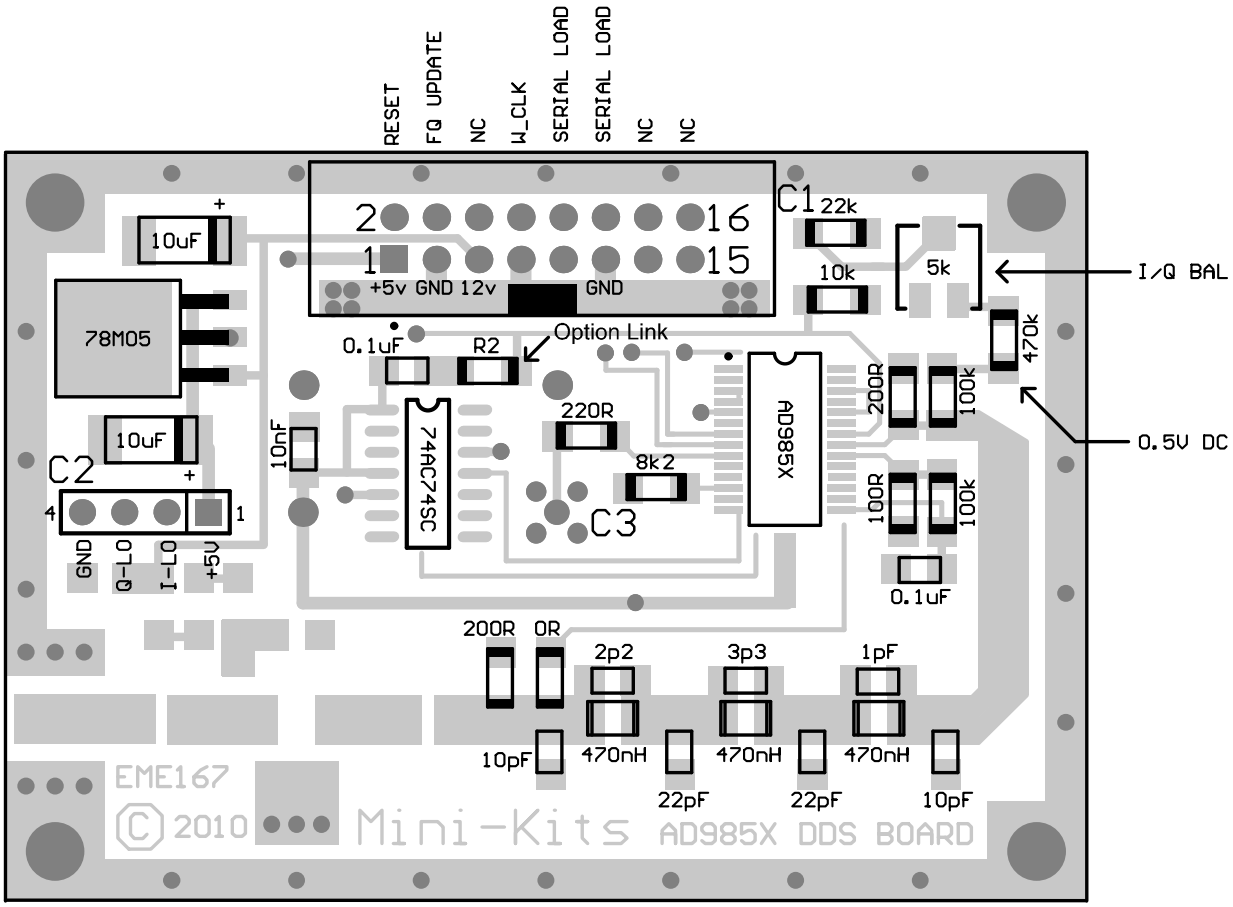

I/Q DDS KIT BOTTOM OVERLAY

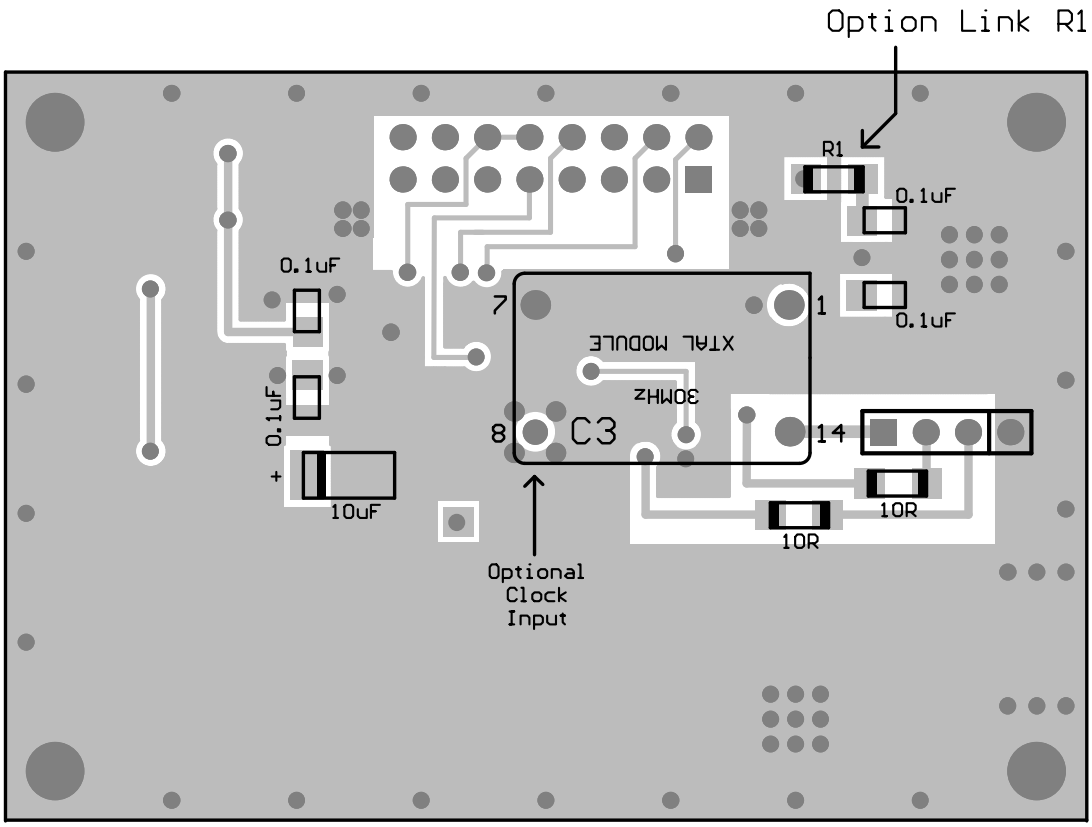

UPDATED 6/1/2015