6M VHF PRE-AMPLIFIER

SPECIFICATIONS: EME157B6 KIT

Frequency Range:	Tuneable 40 to 60MHz
Bandwidth:	4MHz @ 3dB, (depends on input tuning)
Gain:	Typically 18dB +/-1dB Gain with –7dB onboard attenuator
Noise Figure:	<1.8dB Typically 1.5dB (Includes Relays)
	Tested with a HP8970B / HP346B
Through Loss:	0.05dB maximum at 50MHz (Bypass Mode)
Power Handling:	100Watts Carrier (+50dBm)
Power Supply	+11 to 15vdc @ 100mA
Size:	PC Board 66.7 x 83 x 25mm
Kit Webpage:	**www.minikits.com.au/eme157.htm**

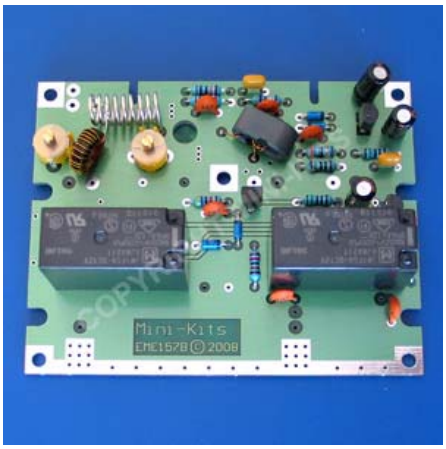

DESCRIPTION: The Pre-amplifier has been designed to be easy to construct, and can be centre frequency tuned for use between 40 and 60MHz, and is suitable for the 50 to 54MHz Amateur Band. The pre-amplifier uses a low cost BF998R MesFET that has very good characteristics on the VHF and UHF bands. The pre-amplifier is essentially a tuned input BF998R MesFET, with a wideband 50ohm matching transformer on the output. The pre-amplifier is best mounted close to the antenna and incorporates RF changeover Relays, and power supply decoupling so that power can be fed via the coaxial cable to power the pre-amplifier. The design is simple to tune, and does not have any instability problems due to the wideband output matching circuit.

AMPLIFIER DESCRIPTION: Refer to the circuit diagram. The input filter consisting of a 2-10pF trimmer capacitor and L1, is a series tuned resonant circuit that helps to reduce the 3dB bandwidth of the amplifier to around 4MHz. This helps with overload from signals outside the 50MHz band, especially strong Ham 28 and 144MHz transmissions. L1 connects to the 50ohm tapping point on L2 and with a 2-22pF trimmer capacitor in parallel forms the main input tuned circuit for the amplifier. The noise figure is determined by the matching and the tuning of the input filter trimmer capacitors. Back to back 1N5711 diodes, are used on both the input and output of the amplifier to bypass any stray RF from destroying the MesFET when the pre-amplifier is in TX mode. The BF998R is biased for 10mA with 4 volts on Gate 2. The output impedance is matched to 50ohms using a high frequency M7 material ferrite balun transformer. A 7dB attenuator on the output of the reduces the gain to around 18dB and also helps with 50ohm matching and RF protection.

RF RELAY SWITCHING: The Pre-amplifier has an RF sensing circuit to ensure that the amplifier is bypassed in Transmit mode. In Receive mode, the Relays are switched on so that any loss of voltage to the amplifier drops the relays out into bypass Transmit mode. Transmit RF is sensed via a 22k resistor **(R1)**, and rectified by two 1N5711 diodes. The DC voltage produced switches the BC547 transistor on, which discharges the 10uF capacitor and pulls the 2N7000 Fet's gate input low. The Fet's drain voltage goes high releasing the relays into TX mode. When going back to Receive mode, the 10uF capacitor discharges slowly to allow for SSB operation inbetween voice peaks chattering the relays. The relays however are best switched with DC from the Transceiver, or from a Transmit sequencer with the RF sensing being used as a safety circuit only. For manual DC switching, the +12vdc supply to the pre-amplifier is controlled by switching +12vdc to the pre-amplifier in RX mode, and dis-connecting the power in TX mode. This can either be done by feeding a separate +12vdc DC feed cable up to the pre-amplifier, or by using the RF decoupling circuit L4 on the PC board, and using the coaxial cable to feed +12vdc to the pre-amplifier..

POWER SUPPLY: Refer to the circuit diagram. The preamplifier uses a 78L08 regulator to provide the primary voltage for the BF998R MesFET. Power supply filtering capacitors are used to lower the regulator noise and decouple RF from entering the power supply voltage rails.

CONSTRUCTION:

1. The PCB supplied is a professionally made plated through hole board to make construction easier. It comes as a set of two boards that can be broken apart easily, and filed flat to clean up the boards edges Plated through earth holes are shown as dark colored pads on the PCB overlay diagram. Earth connections do not have to be soldered on both sides of the board, only the bottom side. To assist construction especially winding and mounting the coils, please refer to the pictures on the Kits webpage.
www.minikits.com.au/eme157.htm

2. The first part of construction is to snap the two circuit boards apart and cut away the break offs and file the edges clean. The two board will be soldered together once all the onboard components have been fitted.

3. Next install the small EME180 PC board and BF998R on the bottom side of the board as shown in the PCB overlay diagram. **It may be easier to solder the small PC board to the main EME157 board first before soldering the BF998R. One lead on the BF998R is fatter and this is the source connection, (S).** Next tack solder one lead of the BF998R to the small board, and check that you have the MesFET the correct way around before completely soldering into place.

4. Fit the two 1N5711 schottky diodes as shown on the bottom PCB overlay diagram. This a modification to the original design to help protect the BF998R from damage. The diodes will have to be fitted like SMD components with one end of each diodes lead soldered directly to the strip-line on the board. The other end of each diode can be mounted through the holes in the PCB like a conventional components, and flush cut.

5. Next you can start soldering the Resistors, Capacitors, and remaining Diodes to the board. Make sure that you check the correct orientation for the Diodes and Electrolytic Capacitors before soldering in place.

6. Fit the 78L08 Regulator, BC547 Transistor, and 2N7000 FET to the board noting that the polarity of these components are correct.

7. Next wind coil L2. For (50MHz the coil is 21.5 Turns of 0.8mm ECW close wound around a 5mm drill bit to a length of 20mm long) **Refer to the picture on the web site listed in the parts list for the correct way to wind and space L2. The wire needs to be wound around the drill bit the correct way so that it will fit the board.** At the 3.5 turns from the cold end of the inductor scrape the enamel away from the outer of the turn and tin with solder. This is where L1 will be connected. **Fit the coil to the PC board sitting it flat against the board and solder it into place.** Next place the 5mm drill bit inside the coil and lift upwards until the coils turns are tightened and when the bottom of the coil is around 2mm above the board.

8. Next wind coil L1. For (50MHz the coil is 24 turns of 0.4mm ECW wound 270 degrees around the black T37-10 Toroid). **Once again refer to the web site pictures to make sure you wind it around the core correctly.** The coil is mounted horizontally onto a TO220 plastic transistor insulator to raise it off the top of the PC board. **Cut the ends of the wire long enough so that they can be connected to the hole in the board and also to L2.** For (50MHz L1 is connected to the 4th turn from the ground end of L2).

9. Next wind the BN7-1050 2 hole Balun core L3. For (50MHz wind 3 turns of 0.3mm ECW through the core **A to B,** then make a 15mm loop and twist the loop together for a tap, and then wind a further 4 turns **B to C**). **One turn is when the wire passes through one hole of the 2 hole Balun, and then around through the second hole. Passing through one hole is only a half a turn.** Refer to the web site pictures on how this is mounted to the PC board. It can be a bit tricky and you need to remember which end of the wire has the 2 turns to the tapping point for connection **A** the BF998R Drain output connection.

10. Next wind the coil L4. For (50MHz the coil is 19 turns of 0.4mm ECW wound 240 degrees around the red T50-2 Toroid). **Once again refer to the webpage picture to make sure that you wind it around the core correctly. Cut the ends of the wire long enough so that they can be easily connected through the holes in the board.**

11. It is suggested that the Relays only be mounted after the two PCB's are soldered together, and the BNC sockets are fitted in section 12. below.

12. The Preamplifier is designed to use the supplied sub PC board to mount two BNC bulkhead connectors. This makes it easy to use in conjunction with the optional GME mast head amplifier enclosure. Simply tack solder the sub board to the edge of the main board, and check the alignment, and make sure that it fits into the masthead enclosure correctly. **Don't fully solder until you have checked that the BNC connectors can be fitted and the nuts done up without fouling on the main board. Recheck the whole Preamp assembly in the box before soldering the boards fully together on both sides of the main board.**

13. Fit the BNC sockets to the sub PCB, and do them up tightly to avoid them loosening over time. Solder 0.7mm TCW from the board connections to the sockets. Other connectors should not be used as the diameter of the connectors may not fit the GME masthead enclosure. If TNC connectors are available then these may be able to be used if they don't foul on the enclosure.

14. Cables greater than 6.5mm diameter will not fit through the masthead enclosure, so cables like LMR240 are highly recommended for low loss short runs. It is suggested that the pre-amplifier be mounted close to the antenna feed point, and a short length of LMR240 type cable be used to connect to the antenna. On the output of the pre-amplifier a length of LMR240UF (ultra flex) can be used to route around antenna rotators to connect to the low loss feed line to the Radio room.

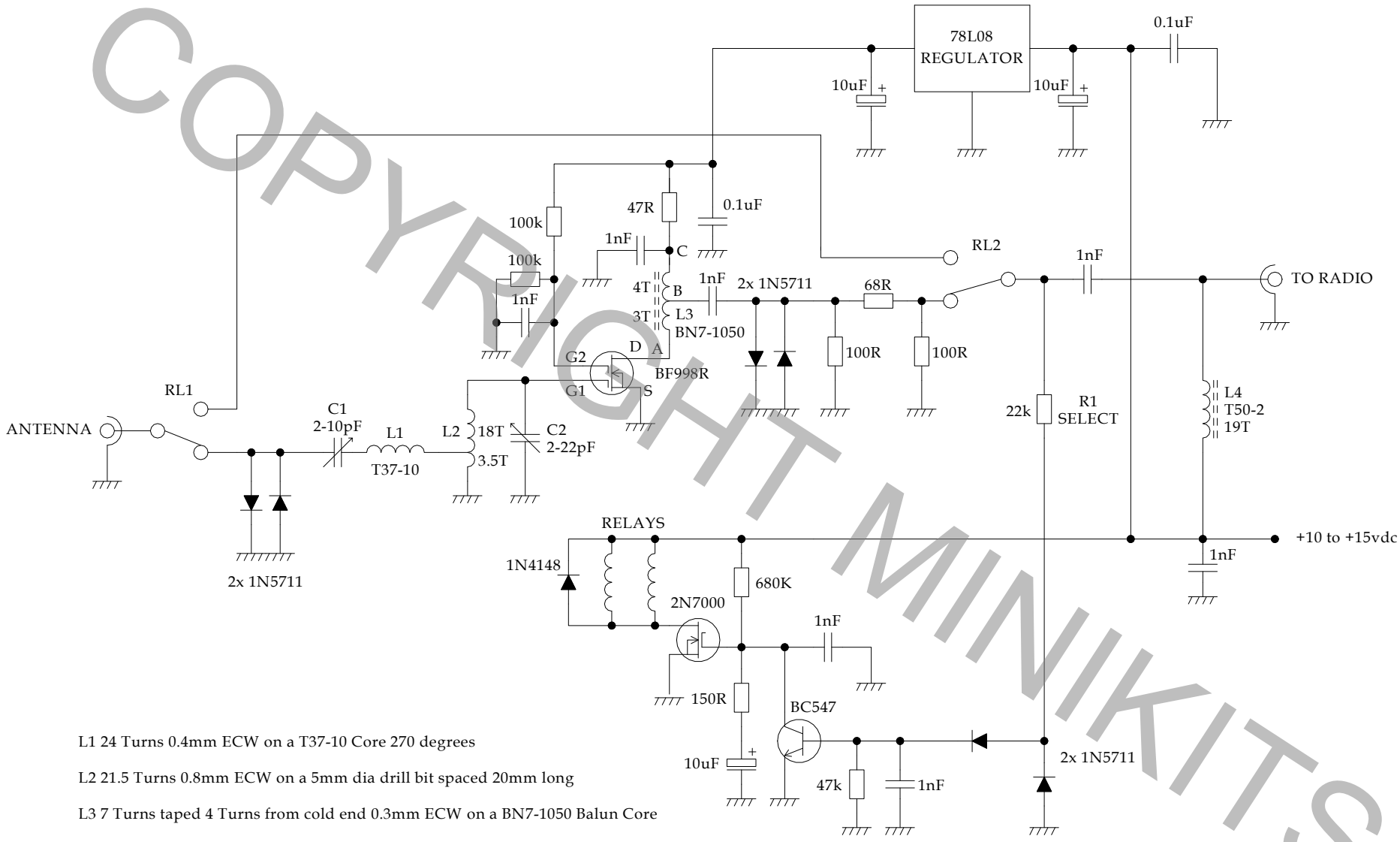

L1 24 Turns 0.4mm ECW on a T37-10 Core 270 degrees

L2 21.5 Turns 0.8mm ECW on a 5mm dia drill bit spaced 20mm long

L3 7 Turns taped 4 Turns from cold end 0.3mm ECW on a BN7-1050 Balun Core

L4 19 Turns 0.4mm ECW Wound on a T50-2 Toriod Core 240 degrees

6M PREAMPLIFIER

DRAWN	MINI-KITS
DATE	24/01/2015
PROJECT	6M PREAMP
FILE	EME157B6 VER4.SKF

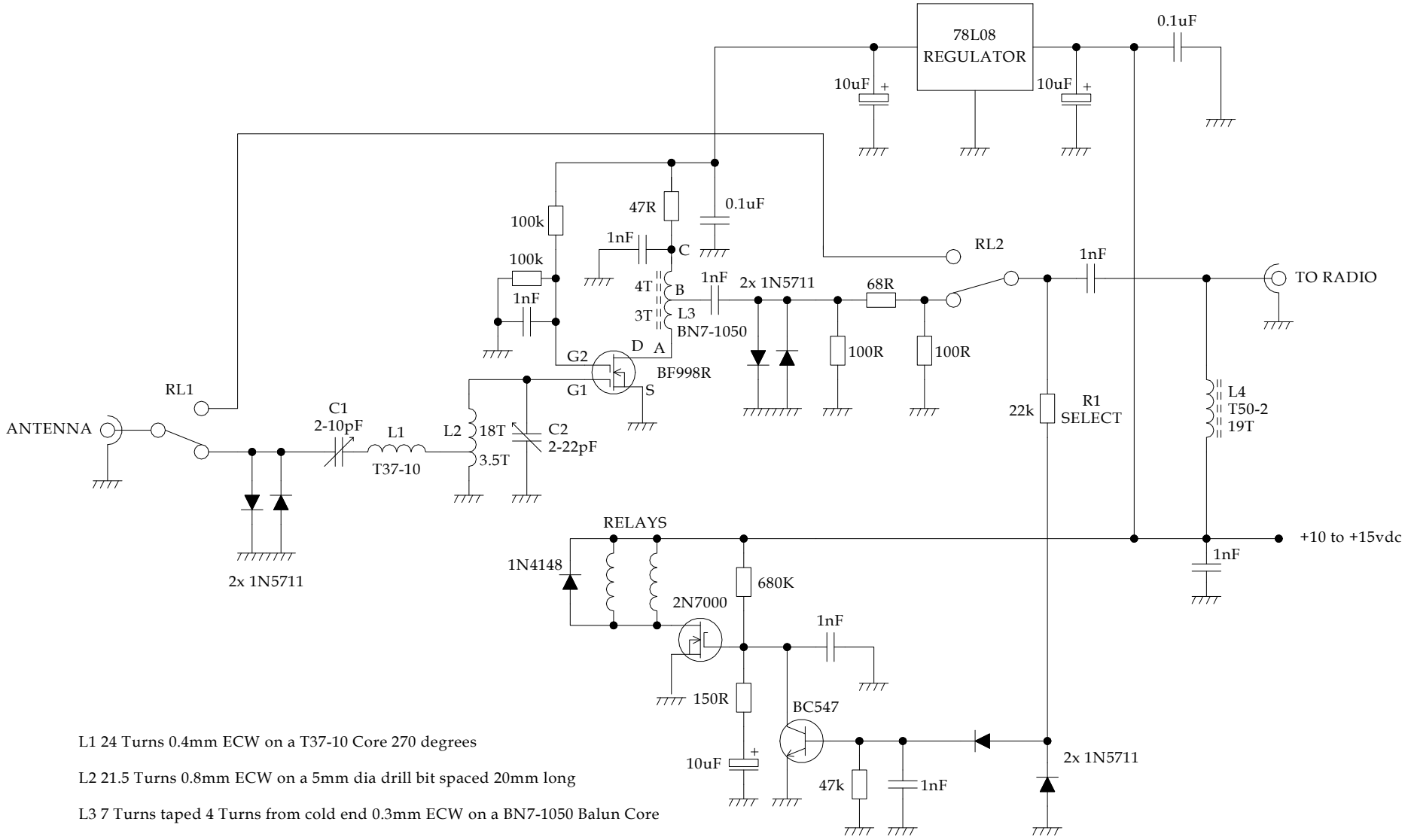

L1 24 Turns 0.4mm ECW on a T37-10 Core 270 degrees

L2 21.5 Turns 0.8mm ECW on a 5mm dia drill bit spaced 20mm long

L3 7 Turns taped 4 Turns from cold end 0.3mm ECW on a BN7-1050 Balun Core

L4 19 Turns 0.4mm ECW Wound on a T50-2 Toriod Core 240 degrees

6M PREAMPLIFIER

DRAWN	MINI-KITS
DATE	24/01/2015
PROJECT	6M PREAMP
FILE	EME157B6 VER4.SKF

15. Mount the two Relays to the board. Make sure that you flow the solder well as the connections need to be able to handle high RF current in Transmit mode.

16. Finally when you are happy with it all, All the inductors wound on the Toroid and Balun cores can be held in place using some nail varnish. Once they have dried, they can then be secured to the PCB with a small amount of non acidic silicone, or hot melt glue. L4 can be secured to Relay RL2 the same way. A piece of 10mm high, high density foam can be glued onto the top of the right side relay, so that when the masthead enclosure lid is shut, it holds the amplifier PCB firmly in place.

TESTING and ALIGNMENT

1. Connect a +12 to +13.8vdc power supply to the pre-amplifier and check that the relays engage. **There is some delay the first time power is applied due to the charging of the delay capacitor.** Power consumption should not be much more that 100mA @ 12vdc in RX mode.

2. Alignment is straight forward, although some form of signal source or VHF signal generator is an enormous help. Set the two trimmer capacitors to half mesh.

3. Connect a receiver and suitable 50ohm dummy load or antenna to the preamplifier, and tune it to the frequency band that is to be used. All noise figure adjustments are best adjusted on an FM signal. Set both trimmers so that they are approximately half mesh. Using a signal generator or a stable FM signal, adjust trimmer C2 for maximum gain, and C1 for best signal to noise ratio, (maximum quieting on a FM receiver). Reduce the FM signal level until more noise is heard, and readjust the trimmers once again for best signal to noise ratio.

4. Check the operation of the pre-amplifier when going to TX mode. Connect the pre-amplifier to a suitable dummy load or antenna that can handle at least the power output of the Transceiver that you are using. Connect the Transceiver to the preamp output, and Press the PTT to check that the Relays drop out bypassing the pre-amplifier. On removal of the PTT, the Relays should chick back on for RX mode with a small delay.

APPLICATION NOTES:

1. The Pre-amplifier can be mounted in a suitable enclosure for outdoor use. Mini-Kits supplies the plastic GME Kingray masthead mount boxes that are suitable for mounting at the Antenna. These last for years and are a quality design that effectively seals the inside from water and moisture. If you want a shielded enclosure, then the GME box can be sprayed with Nickel spray, or use a suitable dicast weather proof enclosure. The Nickel spray may provide some further protection from strong out of band signals that could enter the plastic enclosure.

2. The pre-amplifier can either be powered via a DC power cable connected directly to the board, or through the coaxial cable. The easiest solution is to power the pre-amplifier using a DC cable connected directly to the board, and use the on-board RF sensing to switch the preamplifier. RF sensing is an easy solution for switching the preamplifier using FM, but it is much better to DC switch it, especially with modes like SSB that can cause the relays to drop out during long pauses in transmissions.

3. To power the pre-amplifier via the coaxial cable, a Bias Tee is required to feed DC power into the cable. Some multi-mode VHF/UHF Transceivers have an internal Bias Tee and pre-amplifier sequencing built in, but I am unaware of any 6M 50MHz transceivers that have this. These Transceivers are ideal for use with pre-amplifiers, and output +12vdc from the antenna socket in RX mode when the Preamp switch is turned on. They also have a TX delay built in that is similar to the function of a sequencer, to further protect pre-amplifiers by allowing time for the relays to drop out for TX bypass mode. The recommendation for Transceivers without this built in, is to use a suitable VHF Bias Tee like the Mini-Kits EME168 to control the switching, and feed the power up the coaxial cable.

3. The maximum power recommended is 100 Watts, and is due to the Isolation of the Relays and the 1N5711 protection diode power handling capacity. The RF switching requires a minimum of around 1 watt to switch the relays, and this can be adjusted by changing the supplied 22k resistor R1. The 22k was selected for 5 to 100 Watts input. For reliable switching at lower power levels between 1 and 15 watts use a 2k2 resistor.

4. As mentioned above, the pre-amplifier is best switched using a sequenced Bias Tee, or Transceiver with this built in. If a sequenced Bias Tee is used, then the 10uF capacitor connected to the 150 ohm resistor can be removed from the circuit, to provide faster switching from TX back to RX modes. The RF sensing should not be disconnected, as it does add some further protection to the pre-amplifier, even when a sequencer is used.

5. No adjustments are required to the Inductors as they have been tested on prototypes using a Network Analyser and Noise figure Meter for best performance. Inductors L1 and L2 have been optimized for a 4MHz bandwidth, and input matching for a low noise figure. Inductor L3 has been optimized for 50 ohms matching at 40 to 60MHz on the output of the preamp. L4 has been optimized for the lowest loss of

RF power when in TX mode.

OPTIONS:

1. A 7dB attenuator is fitted to the output of the pre-amplifier to mainly reduce the gain to a more suitable level of around 18dB which seems to be a good level. This can be changed to suit your application, but should be a minimum of 3dB to help protect the pre-amplifier from RF when in TX mode. If the Transceiver that you are using has an RF attenuator, then It is recommended that this be turned on to reduce the receiver gain back to a suitable level when used with the pre-amplifier. This will help with receiver overload from strong signals, and give a better gain distribution while still getting the low noise benefit of the pre-amplifier.

2. If your Transceiver does not have a preamp switch that can feed DC power out the antenna socket, then the Mini-Kits EME168 VHF Bias Tee can be used. Please see the web-page. **www.minikits.com.au/eme168.htm**

PARTS LIST

RESISTORS

1 x 47R	1/4 Watt MF Resistor
1 x 68R	1/4 Watt MF Resistor
2 x 100R	1/4 Watt MF Resistor
2 x 150R	1/4 Watt MF Resistor
1 x 22k	1/4 Watt MF Resistor (R1 Select)
1 x 47k	1/4 Watt MF Resistor
2 x 100k	1/4 Watt MF Resistor
1 x 680k	1/4 Watt MF Resistor

CAPACITORS

7 x 1nF	Monolithic Capacitor 5mm X7R 100v
2 x 0.1uF	Monolithic Capacitor 5mm X7R 100v
3 x 10uF	ELC10GA35 Electrolytic 2mm Capacitor
1 x 2-10pF	Trimmer Capacitor **(Yellow 50MHz)**
1 x 2-22pF	Trimmer Capacitor **(Green 50MHz)**

SEMICONDUCTORS

1 x 1N4148	Diode **(Orange Black band)**
6 x 1N5711	High Speed Diode **(Blue Black band)**
1 x 78L08	Regulator 100mA TO92
1 x BC547	NPN Transistor TO92
1 x 2N7000	FET General Purpose
1 x BF998R	Dual Gate MesFET
1 x PC Board	**EME180** (to suit BF998R)

MISCELLANEOUS

1 x PC Board	EME157B Set of 2 Boards
1 x Instructions	EME157B6
1 x 0.7mm TCW	10cm Length (BNC Connectors)
1 x 0.8mm ECW	50cm Length (L2)
1 x 0.3mm ECW	30cm Metre Length, (L3)
1 x 0.4mm ECW	75cm Length (35cm L1, 40cm L4)
1 x T50-2	Toroid (Red Colour For L4)
1 x T37-10	Toroid (Black Colour For L1)
1 x BN7-1050	2 Hole M7 Balun Core L3
1 x INSL02	T0220 Plastic Bush
2 x Relays	JW1FSN-DC12V (Panasonic)

OPTIONAL

1 x ENCL19	GME Kingray Masthead amplifier Box
2 x BNS01	BNC Bulkhead mount sockets.

TOP PC BOARD OVERLAY EME157B6

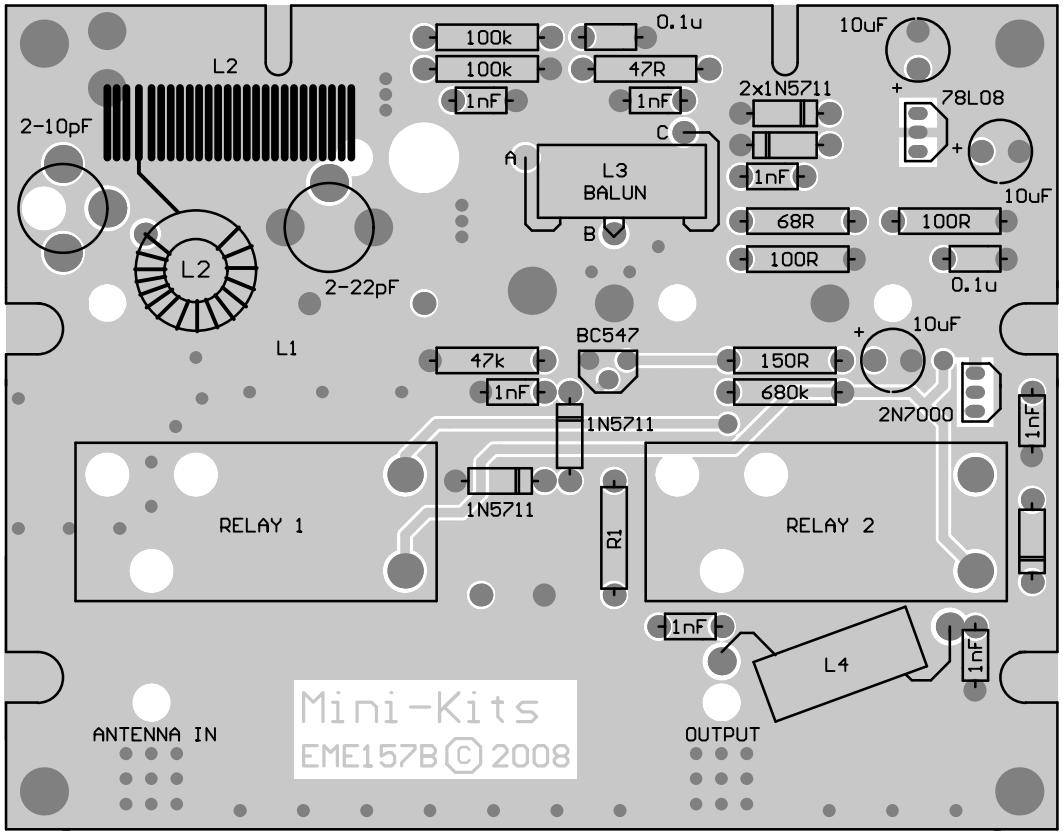

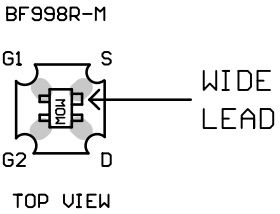

BOTTOM PC BOARD OVERLAY EME157B6

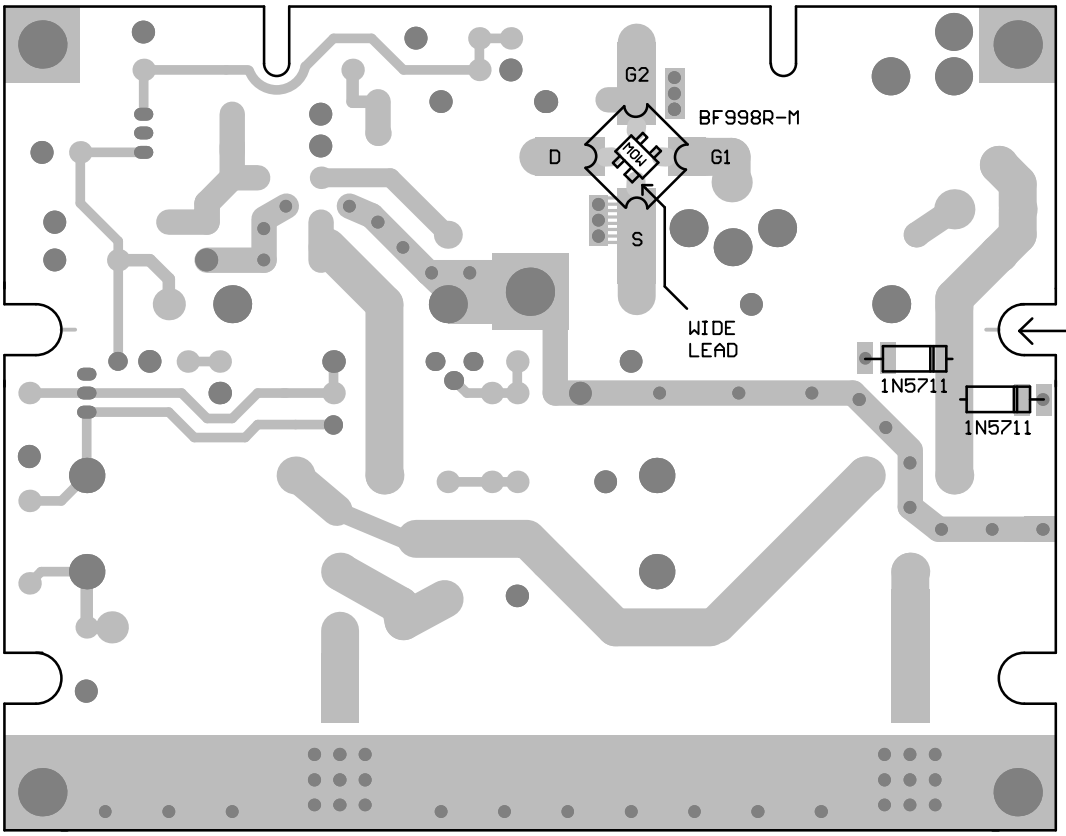

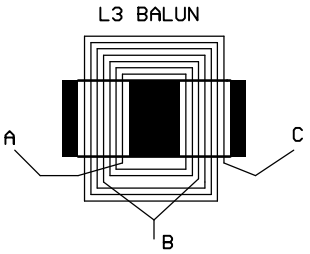

CUT BOARD ACROSS HERE FOR RECEIVE ONLY PREAMP